Arc Welding Robot

EFORT

ARC10-1600

ARC10-1600 is a medium payloads robot.
Maxium payload 10 kg with maxium reach 1604 mm.

Highlights

Thanks to the large and hollow design, the cable can be routed in a hollow way, effectively improving the service life of the cable, and the posture change in a narrow space is more flexible;
High-rigid gearbox with strong impact resistance helps customers challenge various application scenarios;
Thanks to the high stiffness transmission design and advanced trajectory algorithm, the improved robot accuracy performance helps customers to face variety of application scenarios.

Applications

It can be used in Arc welding applications.

Industries

Suitable for metal parts, auto parts, steel structure and other industries.

EFORT Intelligent Equipment Co., Ltd.
PHONE: (00 86) 400-052-8877
ADDRESS: No.96 East Wanchun Road, China(Anhui) Pilot Free Trade Zone Wuhu Area, Wuhu, Anhui Province, China
WWW.EFORT.COM.CN

SPECIFICATIONS

Model		ARC10-1600
Type		Articulated
Controlled axes		6 Axes
Max. payload on wrist		10 kg
Repeatability		±0.03 mm
Robot weight		170 kg
Reach		1604 mm
Robot IP grade		IP54 / IP67 (Wrist)
Cabinet IP grade		IP54
Drive mode		AC servo drive
Installation		Floor, Upside-down, Wall
Installation enviroment	**Ambient temperature**	0~45 °C
	Ambient humidity	RH≤80% (No dew nor frost allowed)
	Vibration acceleration	4.9 m/s^2 (<0.5 G)

Allowable load moment at wrist	**J4**	22 N·m
	J5	22 N·m
	J6	9.8 N·m
Allowable load inertia at wrist	**J4**	0.65 kg·m^2
	J5	0.65 kg·m^2
	J6	0.17 kg·m^2
Maximum speed	**J1**	265°/sec
	J2	255°/sec
	J3	270°/sec
	J4	450°/sec
	J5	450°/sec
	J6	700°/sec
Motion range	**J1**	±170°
	J2	+85°/-150°
	J3	+175°/-85°
	J4	±190°
	J5	±190°(The connect outside robot body.) ±140°(The connect inside robot body.)
	J6	±450°(The connect outside robot body.) ±220°(The connect inside robot body.)

OPERATING SPACE

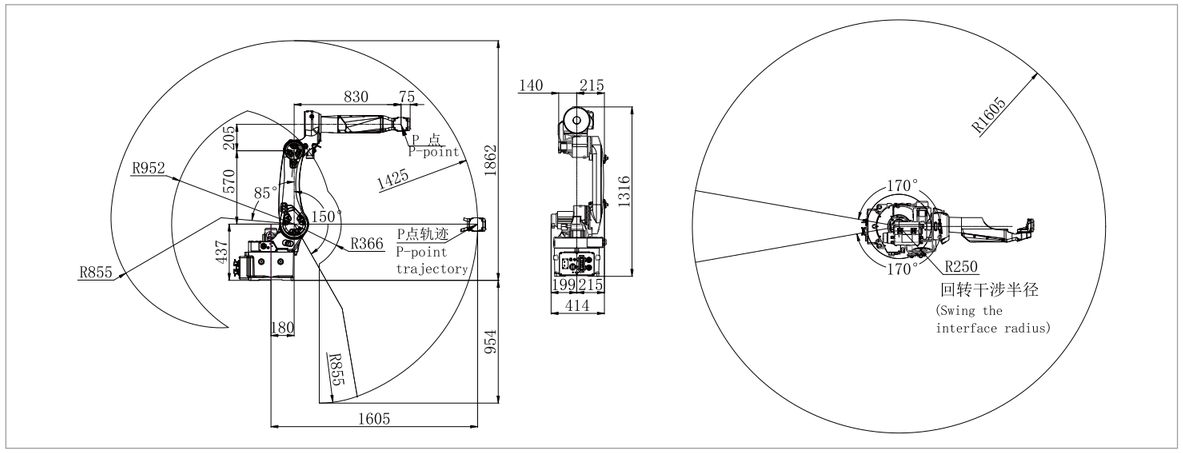

BASE MOUNTING SIZE

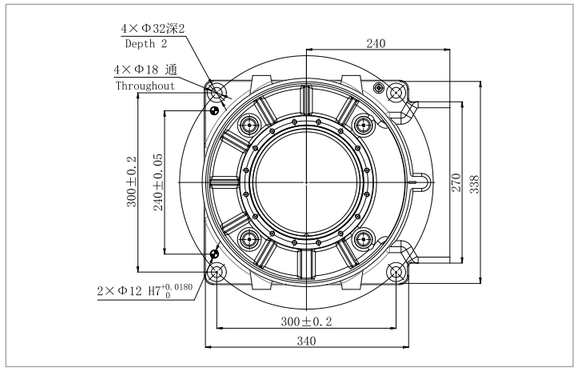

END FLANGE MOUNTING SIZE

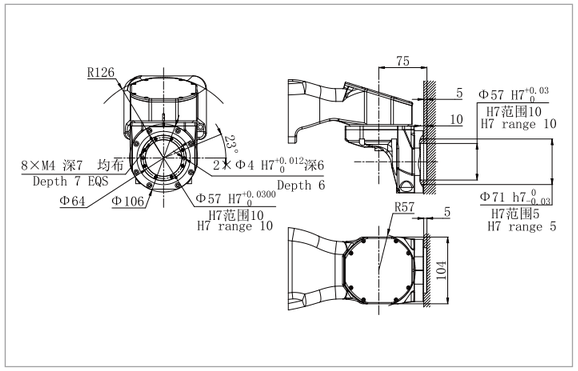

Information Release Time 2024/12