ER150-3200

EFORT

ER150-3200,
Maxium payload 150 kg with maxium reach 3192 mm.

Highlights

Thanks to the high stiffness structure, with high-speed intelligent palletizing application software, the takt is improved by 20%, bring customers more efficiency;
Multiple specific application software could be integrated, with soft PLC and a variety of field bus interface, which enable customers easily face various application challenges;
High performance collision detection function helps safety realization.

Applications

It can be used in handling operations, palletizing, etc.

Industries

Suitable for auto parts, photovoltaic, food and beverage, building materials, logistics and warehousing and other industries.

EFORT INTELLIGENT EQUIPMENT CO.,LTD.
PHONE: (00 86) 400-052-8877
ADDRESS: No.96 East Wanchun Road, China(Anhui) Pilot Free Trade Zone Wuhu Area, Wuhu, Anhui Province, China
WWW.EFORT.COM.CN

SPECIFICATIONS

Model		ER150-3200
Type		Articulated
Controlled axes		6 Axes
Max. payload on wrist		150 kg
Repeatability		±0.2 mm
Robot weight		1160 kg
Reach		3192 mm
Robot IP grade		IP65
Cabinet IP grade		IP54
Drive mode		AC servo drive
Installation		Floor
Installation enviroment	**Ambient temperature**	0~45 ℃
	Ambient humidity	RH≤80%(No dew nor frost allowed)
	Vibration acceleration	4.9 m/s^2 (<0.5 G)

Allowable load moment at wrist	**J4**	1337 N·m
	J5	1337 N·m
	J6	720 N·m
Allowable load inertia at wrist	**J4**	141.1 kg·m^2
	J5	141.1 kg·m^2
	J6	79 kg·m^2
Maximum speed	**J1**	100°/sec
	J2	90°/sec
	J3	85°/sec
	J4	105°/sec
	J5	100°/sec
	J6	195°/sec
Motion range	**J1**	±180°
	J2	+60°/-80°
	J3	+90°/-83°
	J4	±360°
	J5	±120°
	J6	±360°

OPERATING SPACE

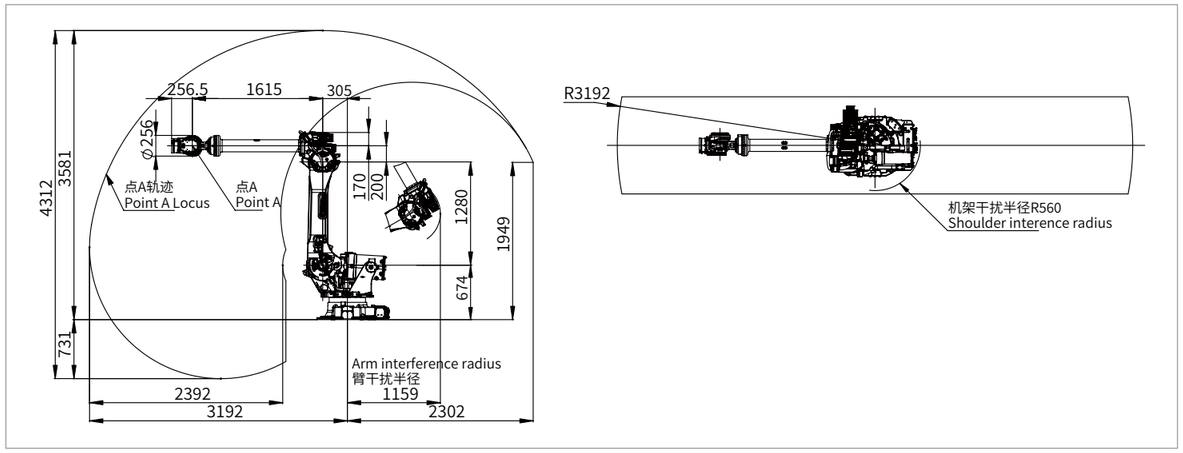

BASE MOUNTING SIZE

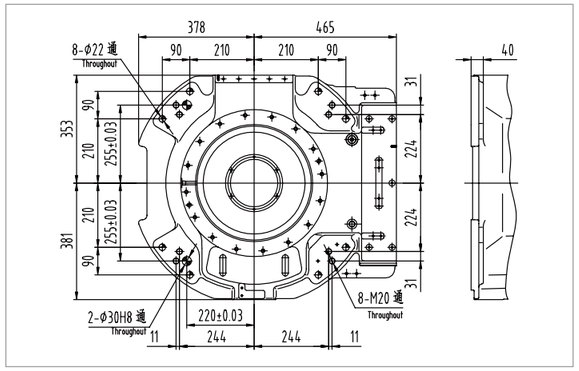

END FLANGE MOUNTING SIZE

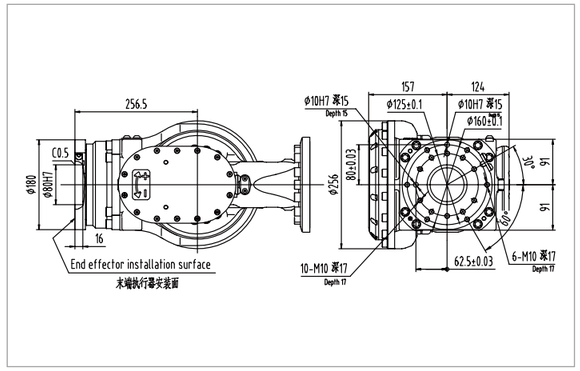

Information Release Time 2023/07