EFORT

智造专家 埃夫特

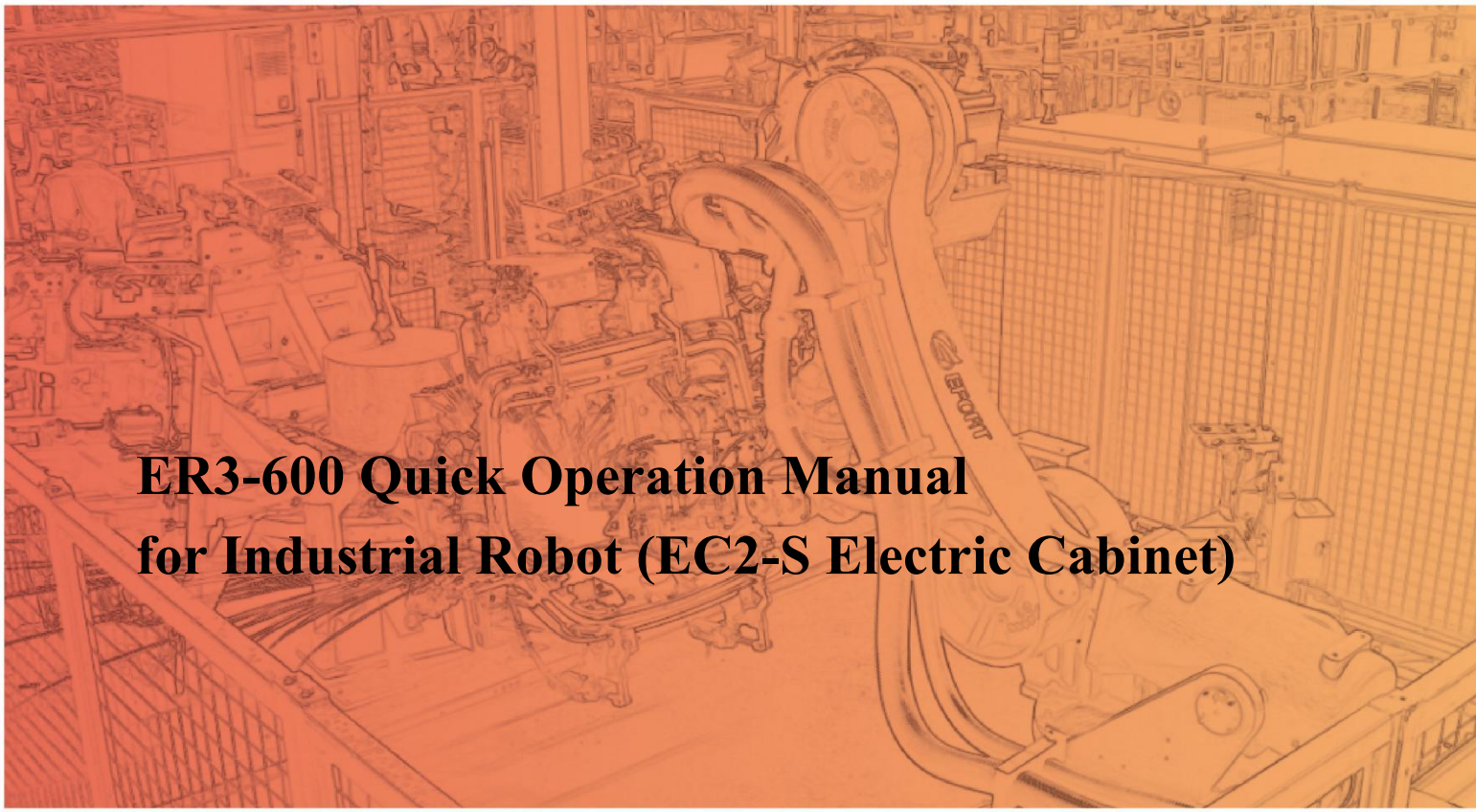

ER3-600 Quick Operation Manual for Industrial Robot (EC2-S Electric Cabinet)

EFORT Intelligent Equipment Co., Ltd.

Service Line（Tel）：+86-400-0528877

Statement

Thank you for purchasing EFFORT ER3-600 industrial robots. Please read the instruction manual before starting to use the robot. The following contents are directly related to your personal and property safety. Any misconduct that does not strictly follow the instructions as stated in the manual may result in physical damage or property loss. The statement and instruction manual is the latest version for ER3-600 series. More updates can be found at www.efort.com.cn.

This manual only serves as the operation guide for ER3-600 industrial robots. EFFORT will not be responsible for any physical damage or property loss that is not caused by the defect of the product. It is strongly recommended that operators should have received special training before having access to operation, teaching, repair, maintenance and inspection of the product.

Version No.： V 1.3.1

Contents

Chapter One Safety....1
1.1 Safety Instructions....1
1.2 Safety Regulations....1
Chapter Two Handling and Installing the Robot....4
2.1 General Introduction....4
2.2 Basic Description....4
2.2.1 Unpacking....4
2.2.2 Preparatory Work before Installation....5
2.2.3 Storage Environment....5
2.2.4 Operation Environment....5
2.2.5 Starting the Robot in a Low Temperature....6
2.2.6 Robot Performance Parameters....7
2.2.7 Robot Motion Type....8
2.2.8 Control Cabinet Position....8
2.3 Handling the Robot....11
2.3.1 Precautions....11
2.3.2 Handling the Robot Body....11
2.3.3 Handling the Control Cabinet....12
2.4 Installing the Robot....13
2.4.1 Setting up a Safety Fence....13
2.4.2 Installation Procedures....14
2.4.3 Ground Mounting....14
2.4.4 Supporter Installation....15
2.4.5 Suspended Installation....15
2.4.6 Installation Environment....16
2.4.7 Integrated Connection Interface....17
Chapter Three Electrical Connection....20

3.1 Robot Power Supply.....20
3.2 Robot Power Cable, Signal Cable and Ground Wire.....21
3.3 Definition of Controller Local IO.....21
3.4 IO Module Expansion.....24
3.4.1 Local IO Module Expansion.....24
3.4.2 Remote IO Module Expansion.....25
3.5 IO Configuration.....26
3.5.1 IO Module Update.....26
3.5.2 Remote IO Configuration.....27
3.5.3 Function IO Configuration.....28
3.5.4 Analog IO Configuration.....37
3.6 Introduction to Emergency Stop.....39
3.6.1 Emergency Stop.....40
Chapter Four Quick Start.....41
4.1 Teach Pendant.....41
4.1.1 About the teach pendant.....41
4.1.2 Function Keys and Interfaces.....42
4.1.3 How to Hold a Teach Pendant?.....44
4.2 Power On.....45
4.3 Jogging.....45
4.3.1 What is Jogging?.....45
4.3.2 Precautions for Jogging.....45
4.3.3 Start Jogging.....46
4.3.4 Joint Coordinate System-Jogging.....47
4.4 Power Off.....47
Chapter Five Common Faults and Recommended Solutions.....49

Chapter One Safety

1.1 Safety Instructions

According to the national and local laws and regulations, great importance has been attached to safety protection in the operation of an industrial robot.

The employer of the robot operator is responsible for the physical damage or property loss in case of an accident. Therefore it is strongly recommended that an operator should fully understand the contents described in this manual or elsewhere and abide by the health and safety regulations.

For safety reasons, it is the fundamental requirement to abide by the instructions described in this manual and other manuals of EFORT. The manual serves as a general introduction to safety regulations which does not take all the aspects into consideration. Therefore, it is highly important for an operator to take preventative measures according to the application system and the work environment when operating a robot.

An operator must read the following information carefully and pay special attention to the safety measures described.

An EFORT industrial robot user should promise to abide by its national or regional safety laws and regulations and to make sure that the necessary safety protection equipment is reasonably designed and correctly installed. An operator should get familiarized with the operation procedures described in the following documents:

Safety Manual for ER3-600 Industrial Robot (EC2-S electric cabinet)

Control Cabinet Operation Manual for EFORT Industrial Robots

Electrical Operation and Maintenance Manual for ER3-600 Industrial Robot (EC2-S electric cabinet)

Mechanical Operation and Maintenance Manual for ER3-600 Industrial Robot (EC2-S electric cabinet)

The quick start manual includes all the safety descriptions of the robot and controller. The robot should be well designed and manufactured to ensure that it can enter all the required areas when it is operated, tested or maintained. The robot should be able to enter the work areas freely if there is a safety prevention frame. An operator should not be exposed in danger of slipping, stumbling or falling.

1.2 Safety Regulations

	Prohibitions 1. Do not change or dissemble the protective equipment or safety equipment arbitrarily. 2. Do not touch a robot in case of waterlogging. Cut off the power and drain off the water. 3. The operation of an industrial robot must be performed by the professionals who have received sufficient training and guidance and have read this manual thoroughly. 4. The space around the emergency stop equipment must be emptied in case of an emergency.

	5. Improper materials must not be processed with the robot and improper adjustment or alteration is forbidden. 6. Those who have not been authorized or who have not received any professional training regarding the operational risks are not allowed to operate the robot. 7. The robot cannot be operated under the following circumstances: • A robot element is exposed. • The safety equipment is disabled. • The fuse and (or) all or any of the mechanical equipment is disabled. • The workpiece is not qualified. • More than one person is operating the robot at the same time. 8. Any violation of the above mentioned regulations is strictly forbidden. Any attempt to load an unoriginal accessory is forbidden in particular. 9. Do not attempt to move the safety protection equipment. Users are responsible to make sure that the safety protection equipment is fixed properly and runs effectively as expected. 10. The safety equipment can only be moved in case of maintenance and the standard maintenance protocols must be followed to ensure the safety of the robot.
	Mandatory Measures 1. Ensure that nobody is in the dangerous areas before booting the robot. 2. Ensure that all the operators have received some professional training in operating industrial robots. 3. A supervisor should constantly monitor the status of the running programs and to make sure that the safety protection program is effective. 4. Maintain the robot as instructed in the manual and keep the robot clean and tidy. 5. Pack the cleaning and maintaining tools in a suitable tool box. Any worker should wear personal safety protection equipment. 6. An operator should follow the current health and safety codes. 7. Stop the robot in case of shutdown, suspected damage, malfunction or abnormal noise. 8. Call the police for professional help in case of fire. 9. The door of the control cabinet should always be lock up and the key should be kept by an electrician. 10. No one is allowed to enter the safety protection area if the power is on. 11. All the suspended safety functions must be restored to normal before the Auto mode is switched on.



Warning

1. The release of the gravity braking system might lead to falling.
2. Danger might occur when a repairer performs a regular maintenance for the safety protection equipment. Therefore, caution and preventative measures are advised.

Chapter Two Handling and Installing the Robot

2.1 General Introduction

This chapter explains how to handle and install the ER3-600 industrial robot (EC2-S electric cabinet) in a workplace. It is strongly recommended that users should read the Safety Manual of EFORT Industrial Robots carefully and refer to the first chapter of this manual for the detailed descriptions on safety issues before installation.

2.2 Basic Description

2.2.1 Unpacking

1. Please check whether the packing remains intact or not before unpacking.
2. Please check after unpacking whether all the accessories are complete and whether they match with the model information on the order list. Contact the supplier if the accessories are not the same as ordered.

Table 2-1 Standard Accessories

Packing List					
No.	Name	Model	Quantity	Unit	Remarks
1	Robot body	Manufacturer standard	1	set	
2	Robot control cabinet	Manufacturer standard	1	set	
3	Control cabinet-robot power cable	power cable	1	set	Standard Length:4m Customized Length: 8m/10m/12m
4		ground wire	1	pc	Standard Length: 4.5 m Customized Length: 8.5m/12.5m
5	Teach pendant connection cable	Industry standard	1	set	
6	Instruction Manual	Manufacturer standard	1	set	

7	Quality inspection report	Manufacturer standard	1	sheet	
8	Warrant	Manufacturer standard	1	copy	
9	Robot accessories	Accessory box	1	pc	
10	Robot main power cables	Industry standard	1	set	Packed in the accessory box
11	Others	1 glass fuse of 6.3 A type; 2 glass fuses of 10A type; A copy of the electrical diagram			

Note: The packing list contains only the standard articles while the customized articles are not included.

2.2.2 Preparatory Work before Installation

This section contains the information to be used when the robot is newly installed or reinstalled. Check the following items before installation:

1	Check whether the robot is intact.
2	Ensure that the lifting equipment is suitable to carry the robot.
3	Store the robot in a required environment if it is not installed.
4	Ensure the expected working environment meets the standard requirement.
5	Ensure the installing ground meets the standard requirement before handling the robot.
6	Check the stability before moving the robot.
7	Handle the robot to the installation cite if the checklist is completed.

2.2.3 Storage Environment

The following table describes the permitted storage environment for the robot：

Parameters	Value
The lowest environment temperature	-40℃
The highest environment temperature	+55℃
Maximum Humidity	93%RH，Dewing Free（40℃）

2.2.4 Operation Environment

The following table describes the permitted operation environment for the robot.

Robot Operation Environment

Parameters	Value
The lowest environment temperature	0°C
The highest environment temperature	+45°C
Maximum Humidity	80%RH，Dewing Free（40℃）

2.2.5 Starting the Robot in a Low Temperature

This section explains how to start the robot in low temperature. An operator needs to adjust the heating rate based on the environment temperature and the running programs. The following table describes the mapping relations between the working cycles and the speed ratio.

Robot Working Cycles when Started in a Low Temperature

Working Cycles	Speed Ratio
3	20
5	50
5	80
5	100

2.2.6 Robot Performance Parameters

The following table describes the performance parameters for the robot.

Table 2-2 Robot Performance Parameters

Robot Performance Parameters		
Model		ER3-600
Motion Type		Joint
Control Axes		6 Axis
Maximum Motion Speed	Axis J1	400°/s
	Axis J2	300°/s
	Axis J3	520°/s
	Axis J4	500°/s
	Axis J5	530°/s
	Axis J6	840°/s
Maximum Motion Rage	Axis J1	±170°
	Axis J2	+85°/-135°
	Axis J3	+185°/-65°
	Axis J4	±190°
	Axis J5	±130°
	Axis J6	±360°
Maximum operation radius		600mm
Maximum wrist load		3 kg
Installation Requirement		Floor mounted or Suspended
Prevention rate		IP65(wrist) / IP54(others)
Repeat precision		±0.02mm
Robot body weight		27kg

The following table describes the performance parameters of the control cabinet.

Table 2-3 Performance Parameters of the Control Cabinet

Control Cabinet Type	EC2-S6
IP Rate	IP20
IO Port	32 digital input ports and 32 digital output ports (Expansion Supported)
Communication Type	TCP/IP、Modbus-TCP、CAN open、ProfibusDP、EtherCAT
Power	220V±10%，50/60Hz
Size	W522mm×D430mm×H247mm
Weight	20kg
Environment Temperature	0℃~45℃

Environment Humidity	80%RH，Dewing Free（40℃）

2.2.7 Robot Motion Type

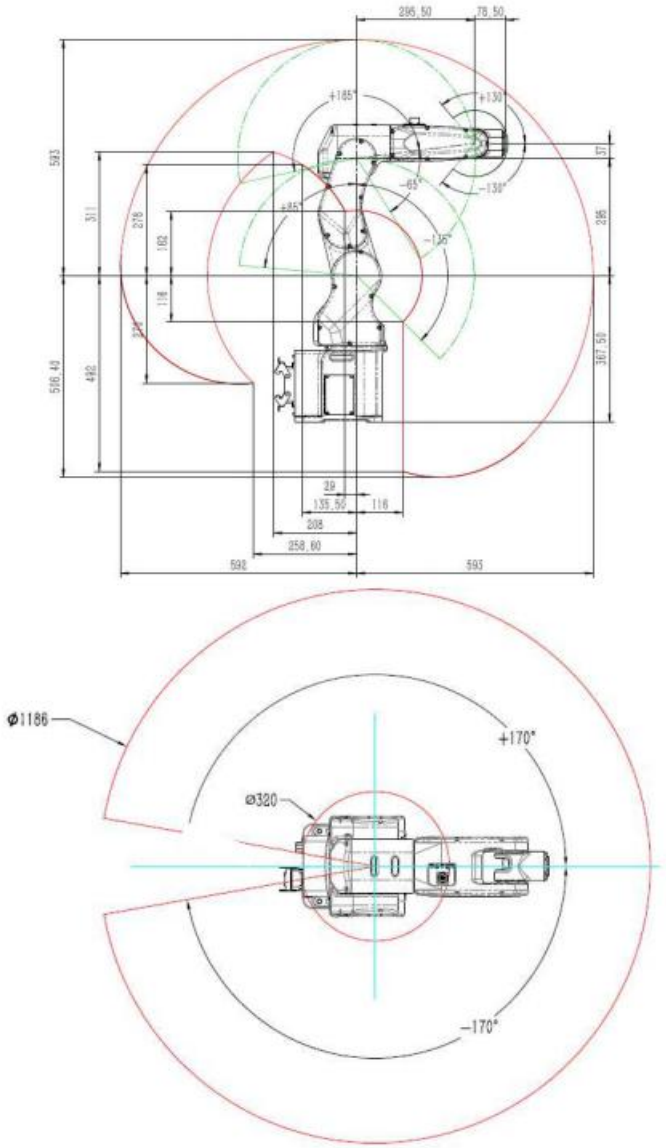

Fig. 2-1 Motion Space of ER3-600 Robot

Note: Fig. 2-1 shows the theoretical maximum motion space of ER10-1600 robot which might be affected by the way the robot is installed.

2.2.8 Control Cabinet Position

Size of the ER3-600 control cabinet (unit:mm).

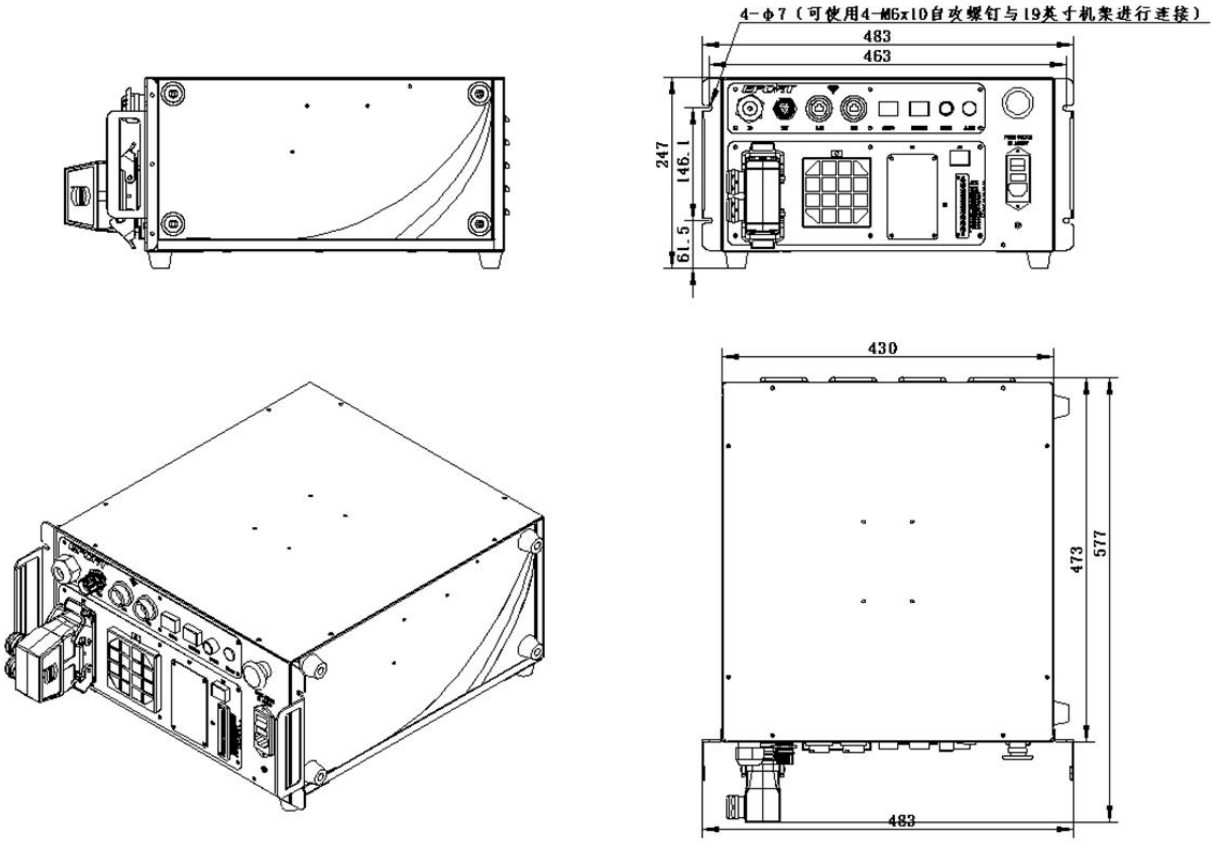

Wind direction

Air outlet

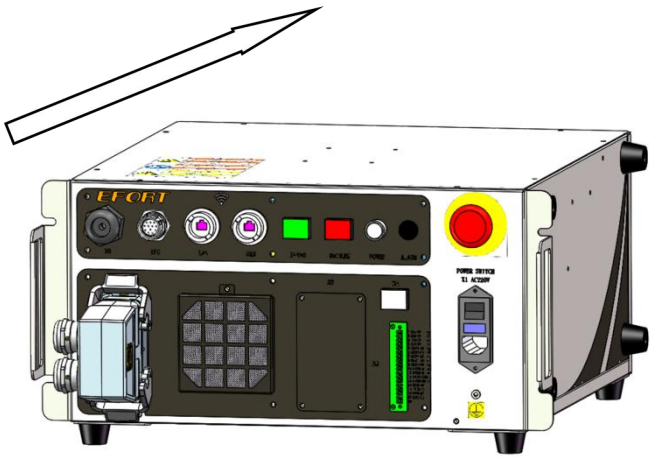

Air inlet

Horizontal Installation

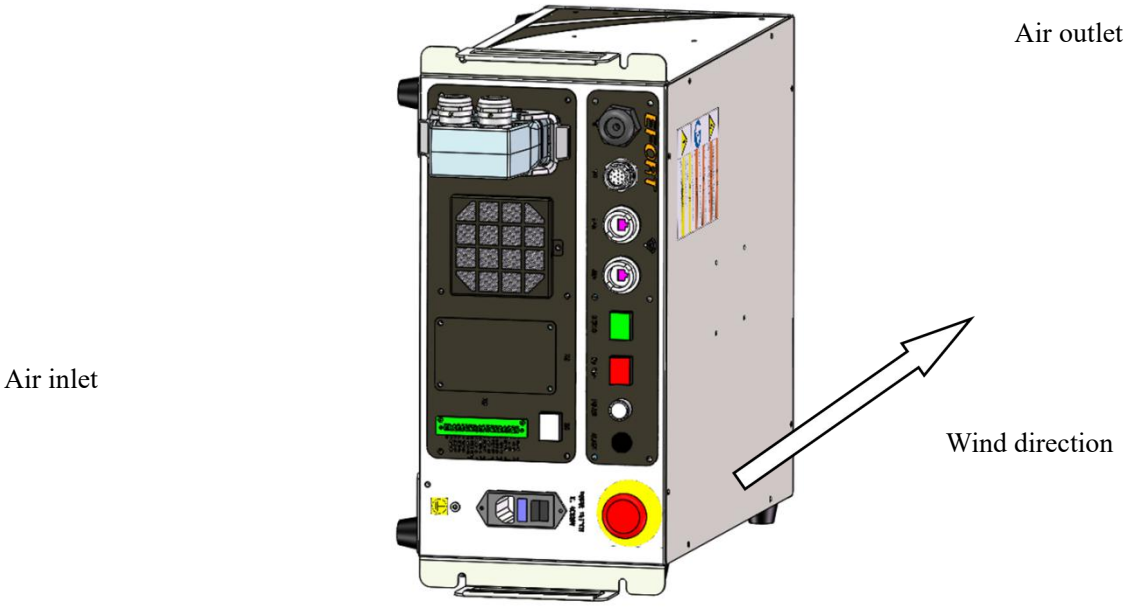

Side Installation

When the electric cabinet is installed on the bench, the screw holes shall be machined according to the dimensions shown in the Fig. below



Bench Installation

Fig. 2-2 Size and Installation Method of Robot Control Cabinet

The ventilation scoop of the control cabinet must not be covered under any circumstance and a minimum separation space of 150 mm around the cabinet should be guaranteed in order to maximize the heating radiator efficiency. Ensure that the robot can move freely within operation space. Limit the robot operation space by means of adjustable stopper or software control if there is any risk of collision. Please refer to *Mechanical Operation and Maintenance Manual for ER3-600 Industrial Robot* and *System Operation Manual for EFORT Industrial Robots* for more details.

2.3 Handling the Robot

2.3.1 Precautions

Please read the following precautions carefully before handling the robot.

 **Caution**	**The handling must be performed by a professional with lifting and forklifting work qualifications. Unprofessional performance might lead to flipping or falling accidents.**
 **Caution**	**Please follow the procedures described in the manual and check whether the weight of the robot and the control cabinet exceeds the maximum lifting load before handling the robot. Operations that do not follow these procedures might lead to flipping or falling accidents.**
 **Caution**	**Please protect the cables when handling the robot and the control cabinet. Besides, the cables should be covered by a shield to prevent from accidental damage.**

2.3.2 Handling the Robot Body

Method:

Position the robot as shown in Fig. 2-3. Lift the robot body from its previous carrier (the total allowable weight is greater than the weight of the robot body). Rubber hoses should be placed on the cables to prevent from direct contact with the robot body. During hoisting, the angle of each axis should be adjusted to the value given in the table below, so as to ensure that the center of gravity is in the middle, which is convenient for hoisting. When lifting, please hold the robot upright to avoid tilting.

Note: Neither the end effector nor the robot arm has any tool in Fig.s 2-3. Caution is advised if a tool is installed to the end effector or robot arm. Adjust the robot position with the parameters shown in the following table.

Position	J1	J2	J3	J4	J5	J6
Joint angles /°	0	32	-27	0	-63	0

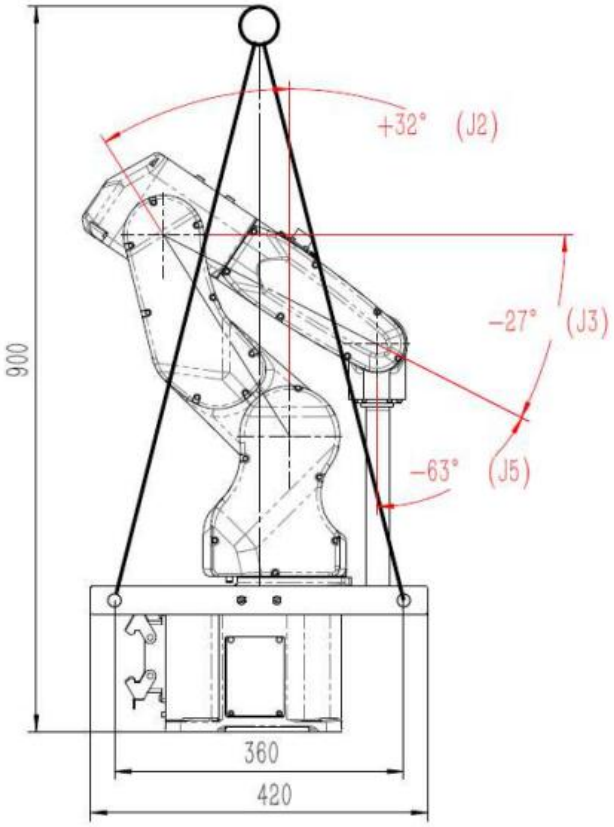

Fig. 2-3 Lifting Sketch Map

Attention	**Corresponding Fixtures must be used in handling the robot.** **Ensure that no pressure is put on the robot arm or electric motor if neither lifting nor forklifting is applied.** **Remove the fixtures and rubber protection after installation.** **Store the fixtures in a safe place for future handling.**

2.3.3 Handling the Control Cabinet

Method:

Handle the control cabinet with the handles placed on both the right and left sides of the front panel as shown in Fig. 2-4.

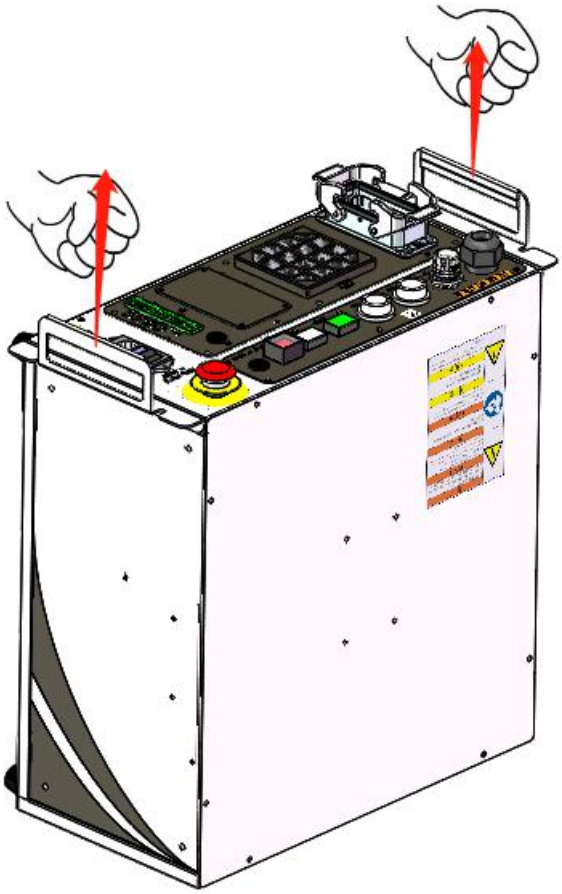

Fig. 2-4 Handling the Control Cabinet

2.4 Installing the Robot

Danger	1. Set up a safety fence to prevent from accidents leading to physical injury or property damage. The robot should be placed in a position from which the end tool or the sharp end of a workpiece can never reach the safety fence even if the robot arm is extended to its reach limit. 2. Neither the power should be switched on nor should any operation be performed until the robot has been properly fixed. Otherwise, accidents such as flipping, physical injury or property damage might occur. 3. The ceiling or wall should be strong enough to bear the weight of the robot if it is intended to be installed to a ceiling or a wall and the relevant emergency countermeasures should be well-planned. Otherwise, accidents such as flipping, physical injury or property damage might occur.

2.4.1 Setting up a Safety Fence

The user of the robot should set up a safety fence according to the National Standards of the People's Republic of China on *Robots and robotic devices—Safety requirements for industrial robots*

(GB11291.2-2013) . It is stated in section 5.4 that the design and integration of a robot should reduce the possibility of an operator being exposed to danger and a user should build up a safe space around a robot taking the position and layout of the robot and the foreseeable danger into serious consideration. Section 5.10 requires that a user should set up the protection equipment on the entrance to the dangerous area if the risk of danger cannot be eliminated or reduced.

Therefore, please set up a safety fence with safety interlock to prevent from physical injury or property damage.

Note: The GB11291.2-2013 standard is equivalent to the ISO 10218-2:2011 standard.

2.4.2 Installation Procedures

The fixing of the robot base and the ground should be able to bear the dynamic load in robot acceleration and deceleration and the fixture static weight. In addition, the robot might be deformed or its performance is affected if the ground is uneven. Ensure that the ground flatness rate is within 0.2 mm. Fig. 2-5 illustrates the size of base interface.

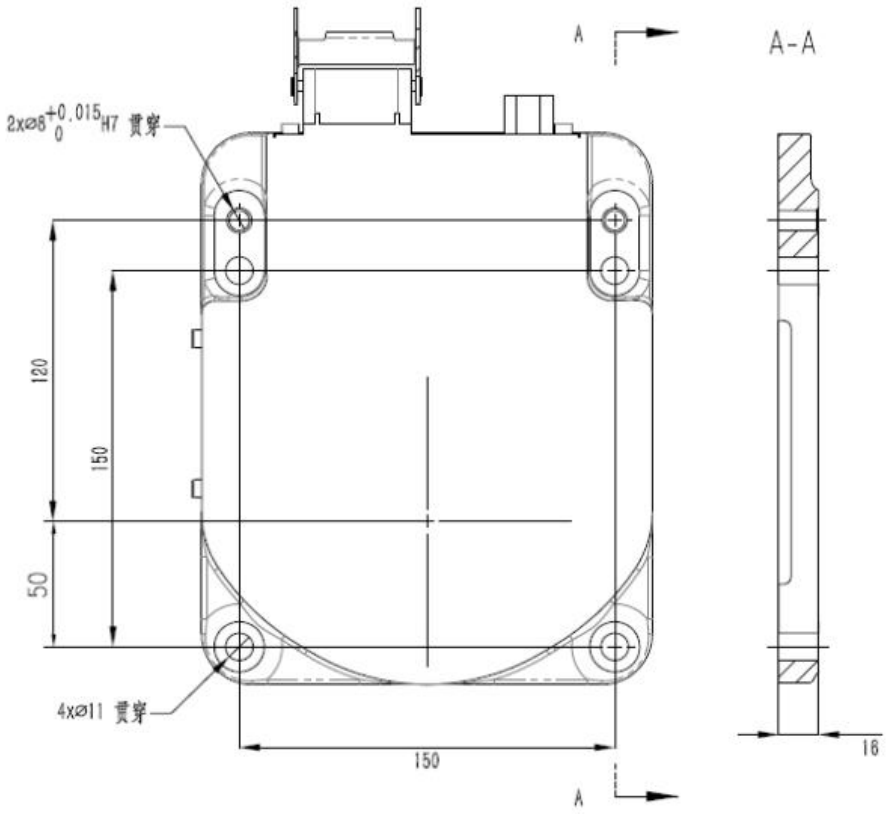

Fig. 2-5 Size of Base Interface of ER3-600 Robot

2.4.3 Ground Mounting

Fix the base on the floor with four M10 type socket cap screws whose length is 1.5-2 times of the nominal diameter. Please fully fix the screws as shown in Fig. 2-6 to prevent the socket cap screws from loosening during the operation of the equipment.

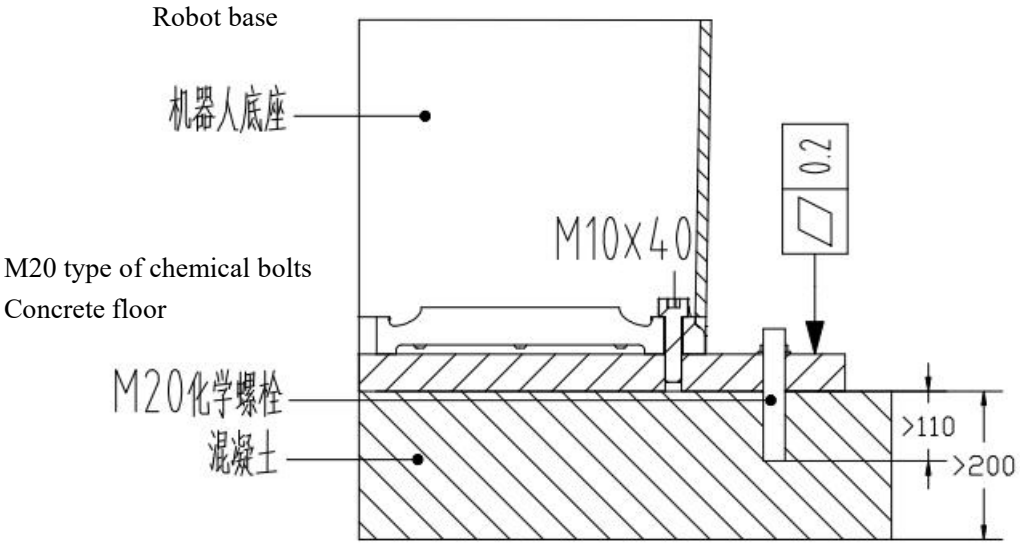

Fig.2-6 Robot Installation Demonstration

Caution	**Increase the size, number and buried depth of chemical bolts for greater stability and reliability.** **Increase the concrete strength to ensure it is greater than that required by the chemical bolts.**

2.4.4 Supporter Installation

The fixing procedures are the same as those described in ground mounting if the height of the supporter is less than 600 mm. Install the supporter first and then fix the robot base to the supporter. The connection strength and reliability between the supporter and the ground needs to be strictly verified if the height of the supporter is more than 600 mm.

Caution	**Increase the size, number and buried depth of chemical bolts for greater stability and reliability.** **Increase the concrete strength to ensure it is greater than that required by the chemical bolts.**

2.4.5 Suspended Installation

The following precautions must be taken to ensure the safety of suspended installation.

1. Install an anti-fall safety device as shown in Fig. 2-7.
2. The strength rate of the connection bolts should be greater than 12.9 and the tightening torque should match with the pre-tightening force expectations.

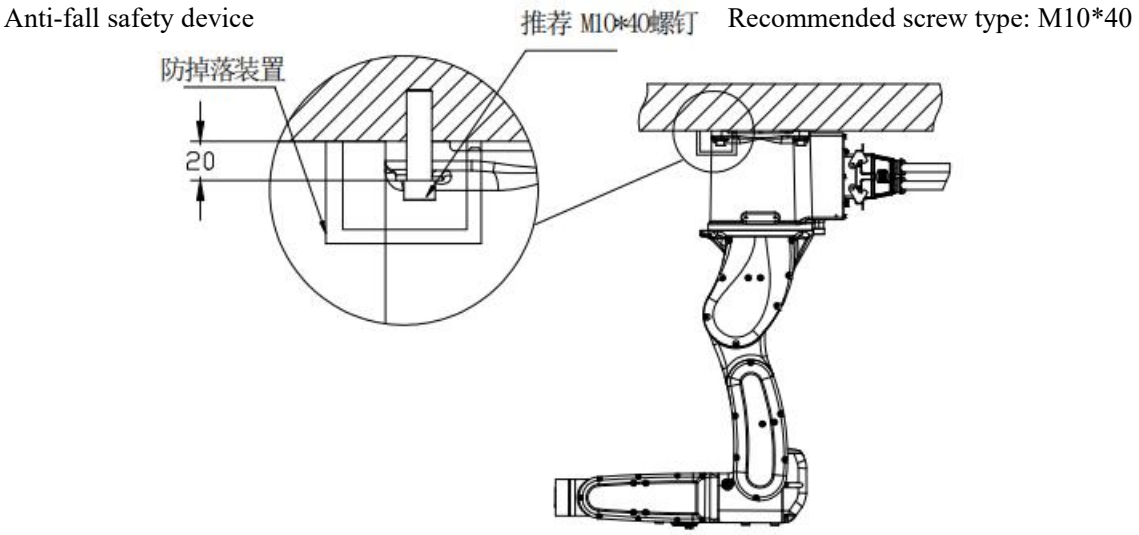

Fig. 2-7 Suspended Installation

2.4.6 Installation Environment

The robot should be transported, stored and operated in a suitable environment and its performance should meet the general requirements.

Table 2-4 Robot Environment Requirement Description

Robot Environment Requirement Description		
Conditions	Working	Transportation and Storage
Environment Temperature	0-45℃	-40~55 ℃
Humidity Rate	≤80%（40℃）	≤93%（40℃）
Atmospheric Pressure	86~106 kPa	
Vibration	Less than 0.5G，4.9m/s^2	
Others	Without corrosive gas	

Note: Please contact the service department for robot protective covers if it is installed in an environment full of dust, cutting oil and strong vibration.

2.4.7 Integrated Connection Interface

The following table shows the size of integrated connection interfaces.

Interface Type	Illustration	Remarks
End flange Interface	Fig. 2-8	End effector connection interface dimension
Air line and IO signal cable connection interface	Fig. 2-9	Connection Interface Dimension
Signal cable interface (detailed descriptions)	Fig. 2-10	Detailed descriptions of the definition method of the signal cable interface

1、End flange Interface

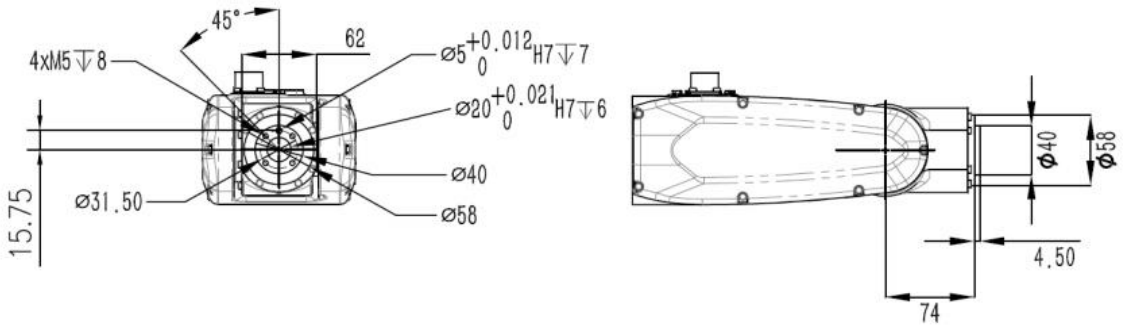

Fig. 2-8 End Flange Connection Interface Dimension

2、**Other Auxiliary Connection Interfaces**

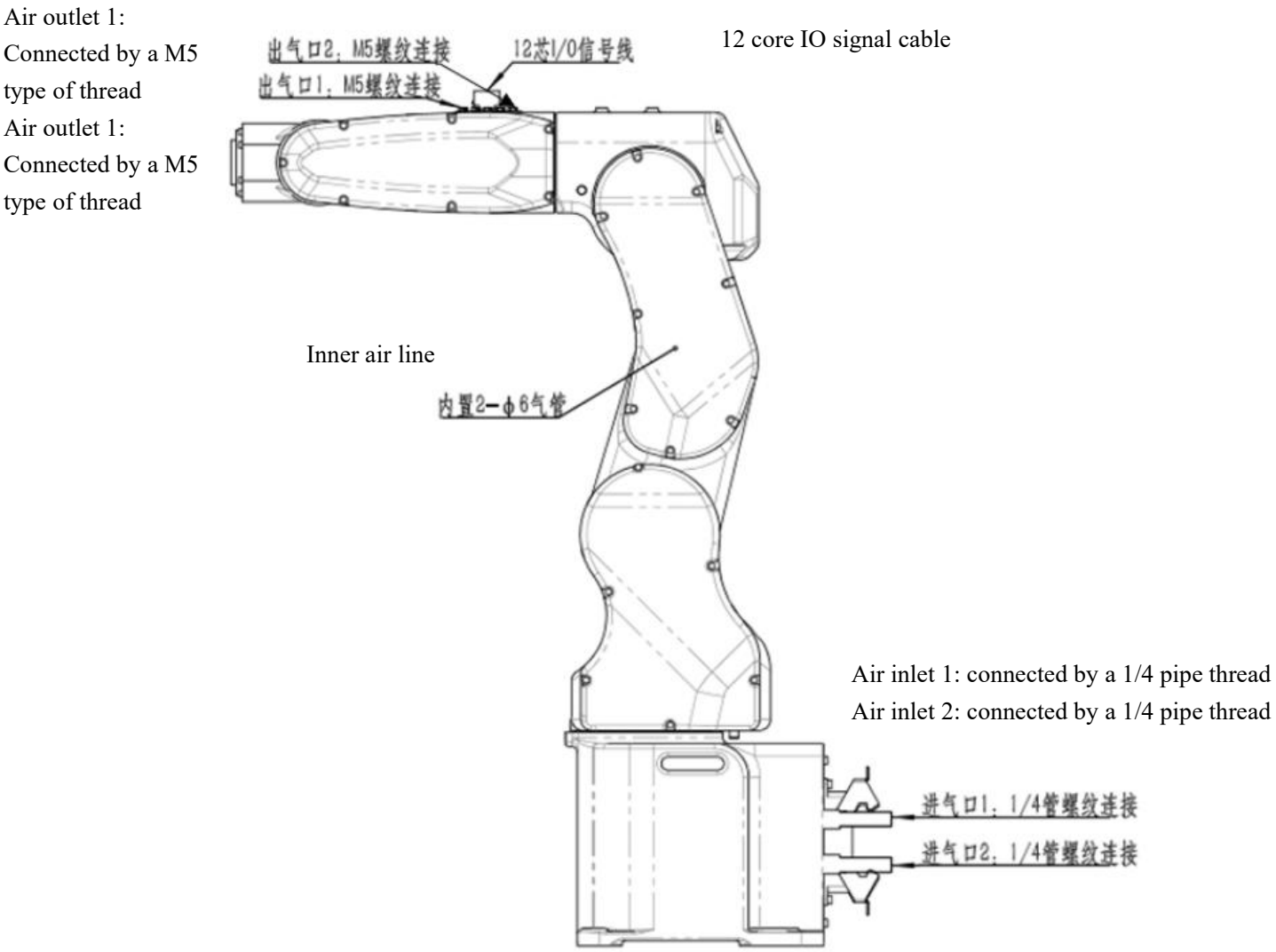

Fig. 2-9 Air line and signal cable interface

Fig. 2-10 Signal Cable Interface Definition

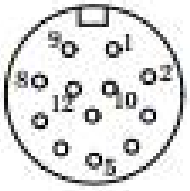

Forearm end plug	Wire ID	IO function
1	1	EC2A DI168
2	2	EC2A DI169
3	3	EC2A DI170
4	4	EC2A DI171
5	5	EC2A DI172
6	6	EC2A DI173
7	7	EC2A DO174
8	8	EC2A DO175
9	9	24VP
10	10	24VP
11	11	0V
12	12	0V

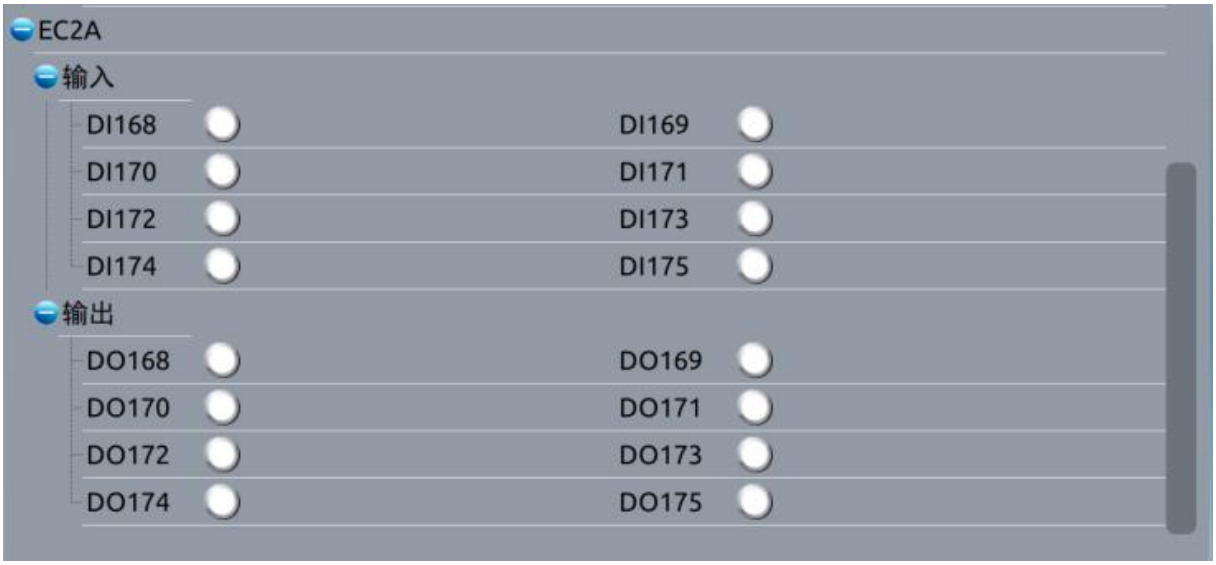

Chapter Three Electrical Connection

The connection cables between the control cabinet and the robot body include power cables, signal cables and the ground wire. Fix the control cabinet and the robot body before connecting the cables to the interfaces placed at the left side of the control cabinet and the back part of the robot base. Both the power cables and signal cables have the error-proof plug design and make sure to place the plug in the right direction.

Warning	**Warning** **1. Cable connections can only be performed when the power is turned off.** **2. Do not coil the cables in a circle when the excess part is longer than 10 meters otherwise the cable temperature might increase dramatically when the robot is performing a certain task which might damage the cable coating.** **3. Connect the ground wire to the controller and robot body before turning on the power otherwise it might lead to electric shock.**

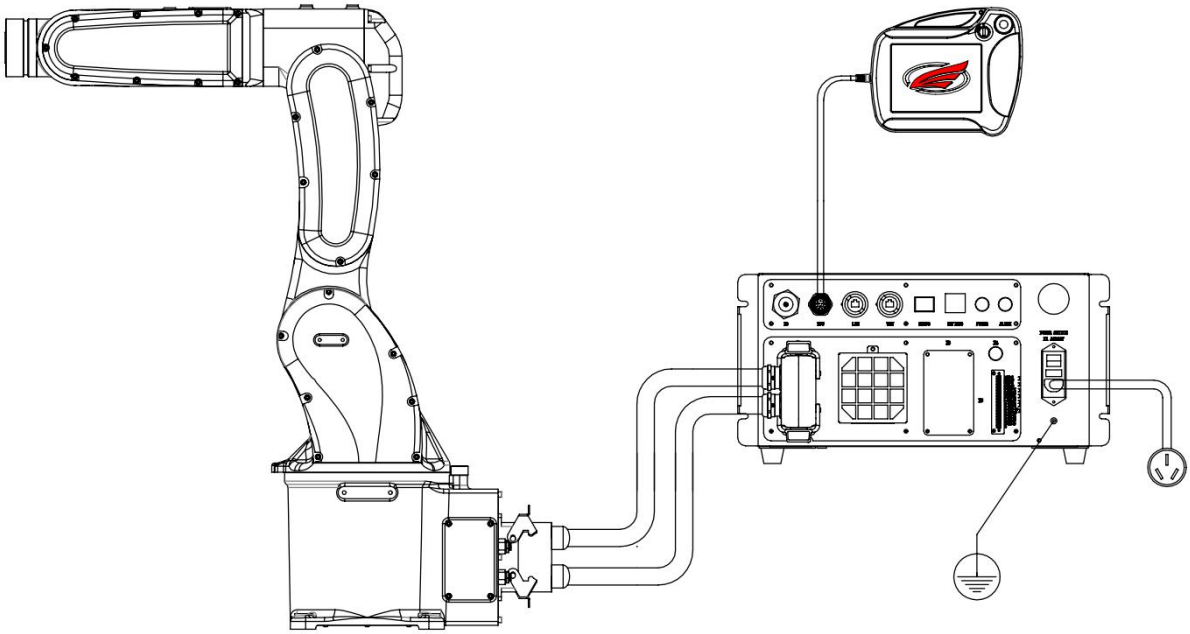

Fig. 3-1 Robot Cable Connection

3.1 Robot Power Supply

1. The main power is 220 v AC and the scope range of voltage fluctuation is ±10%.

2. The allowable leakage current of the electric leakage protector should be more than 30 mA and the power cord must be a shielded 3-cord cable whose cross-section is larger than 1.5 mm^2 .

3. A disconnecting switch must be placed in between the electric wires and the control cabinet to ensure the physical safety of maintenance professionals.

3.2 Robot Power Cable, Signal Cable and Ground Wire

A standard delivery should include the robot power cable, signal cable and ground wire cables and the connection between the robot body and the control cabinet can be completed upon request.

Cable Type	Remarks
Robot power cable	Transfer the driving power from the driving device in the control cabinet to the robot motor.
Robot signal cable	Transfer the data from the encoder to the serial measurement circuit of the driver.
Robot ground wire cable	Connect the robot body and the control cabinet.

3.3 Definition of Controller Local IO

X20 power circular socket

X30encoder signal cable circular socket

PE ground wiring screw

Cable glands*4

Reserved ports *2

Table 3-1 Output Ports Description

Output		
IO Sequence of Teach Pendant	External Terminal Sequence	
DO0	\	system occupied
DO1	\	system occupied
DO2	\	Servo confirmed（system occupied）
DO	\	system occupied
DO4	\	system occupied
DO5	\	system occupied
DO6	\	system occupied
DO7	\	system occupied
DO8	27	user-defined
DO9	28	user-defined
DO10	29	user-defined
DO11	30	user-defined
DO12	31	user-defined
DO13	32	user-defined
DO14	33	user-defined
DO15	34	user-defined
DO16	35	user-defined
DO17	36	user-defined
DO18	37	user-defined
DO19	38	user-defined
DO20	39	user-defined

DO21	40	user-defined
DO22	41	user-defined
DO23	42	user-defined
DO24	43	user-defined
DO25	44	user-defined
DO26	45	user-defined
DO27	46	user-defined
DO28	47	user-defined
DO29	48	user-defined
DO30	49	user-defined
DO31	50	user-defined

All the output ports are defined and occupied by the system except for those labeled by “user-defined”. Users can expand the local or remote IO ports when in need by consulting the EFORT service team.

Table 3-2 Input Ports Description

Input		
IO Sequence of Teach Pendant	External Terminal Sequence	Remarks
DI0	\	E stop 1（system occupied）
DI1	\	Servo enabled（system occupied）
DI2	\	Servo confirmed（system occupied）
DI3	\	Hot swap of teach pendant（system occupied）
DI4	\	Heating Alarm （ system occupied）
DI5	\	E stop 2（system occupied）
DI6	\	Safe door 1（system occupied）
DI7	\	Safe door 2（system occupied）
DI8	3	user-defined
DI9	4	user-defined
DI10	5	user-defined
DI11	6	user-defined
DI12	7	user-defined
DI13	8	user-defined
DI14	9	user-defined
DI15	10	user-defined
DI16	11	user-defined
DI17	12	user-defined
DI18	13	user-defined
DI19	14	user-defined

DI20	15	user-defined
DI21	16	user-defined
DI22	17	user-defined
DI23	18	user-defined
DI24	19	user-defined
DI25	20	user-defined
DI26	21	user-defined
DI27	22	user-defined
DI28	23	user-defined
DI29	24	user-defined
DI30	25	user-defined
DI31	26	user-defined

All the input ports are defined and occupied by the system except for those labeled by “user-defined”. The PIN number 52 and 53 of IO input can be used for the input signal of safety door. An emergency stop of the robot occurs after an alarm once the signal is triggered. The alarm and the E-stop must be restored to normal manually.

The robot is equipped with a standard digital IO module with 32 input ports and 32 output ports. Some of these IO ports are defined and occupied by the system. Besides, it is also equipped with a standard digital IO module with 16 input ports and 16 output ports.

3.4 IO Module Expansion

3.4.1 Local IO Module Expansion

This section explains how to expand the local IO modules of the controller. There are 4 expandable 16DI/ 16DO type of modules in local IO of which both the input DC voltage and output voltage is 24 V and the output current is 500 mA.

Table 3-4 Expandable Local IO Modules List

Type	Demonstration	Quantity	Remarks
Bus coupler	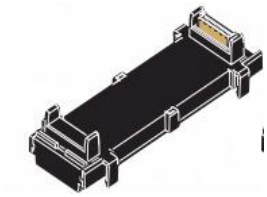	1	
Bus basic module		n	Expand when in need. No more than 2 bus basic modules are allowed (n≤2).
IO module		n	Expand the I/O modules when in need. No more than 2 IO modules are allowed (n≤2).

Table 3-4 Procedures for Local IO Expansion

Procedures	Demonstration
1.Remove the controller from the DIN rail.	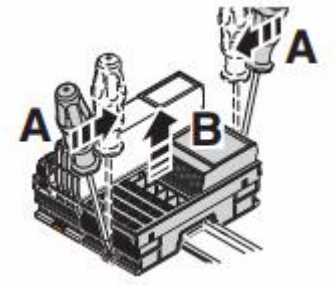

2. Connect the bus coupler and the bus basic module. Mount the combination on the DIN trail.	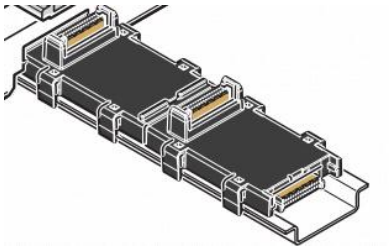
3. Mount the controller on the bus coupler and mount the I/O module on the bus basic module.	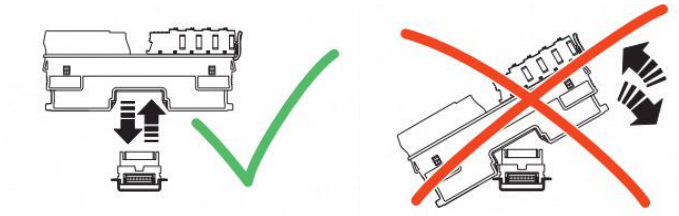

3.4.2 Remote IO Module Expansion

The remote IO module expansion complies with the EtherCAT bus communication protocols. The RJ45 type interfaces can be directly connected through an Ethernet cable without being limited by the inner space of the control cabinet.

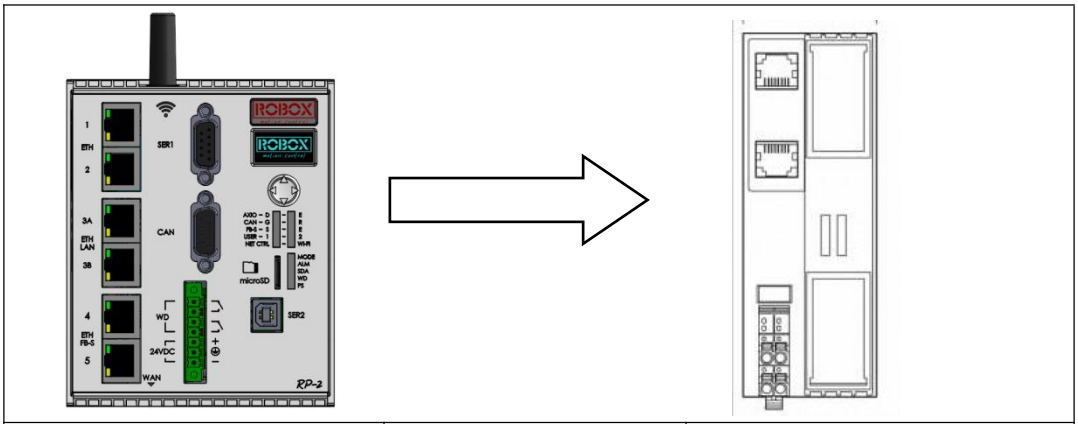

Controller	EtherCAT	Remote IO Module Coupler

Table 3-5 Remote IO Module Expansion

3.5 IO Configuration

This section explains the procedures for IO updates, IO free configuration, remote IO module and analog IO configuration.

3.5.1 IO Module Update

Table 3-6 IO Module Update Procedures

Procedures	Demonstration	Remarks
1. The teach pendant pops up an alarm message if the controller's IO number does not match the preset number.	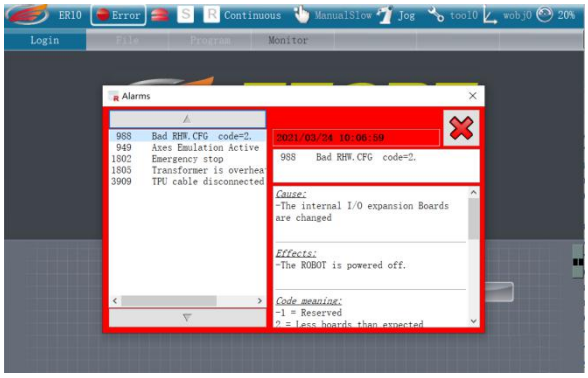	988 Bad RHW.CFG code=2. 9200 PFX.INT. configuration Failure (-1) Click on "×" to hide the alarm message and update the IO module to clear the alarm.
2. Click on Update in IO setting page.	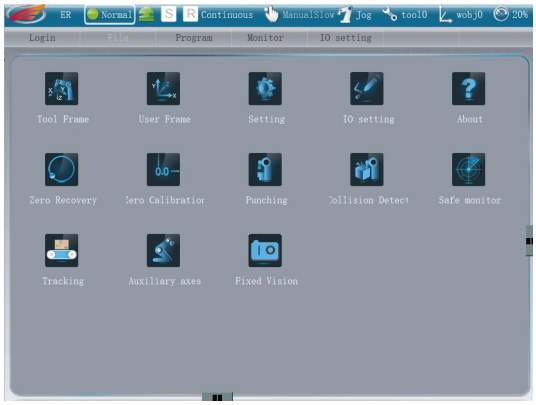 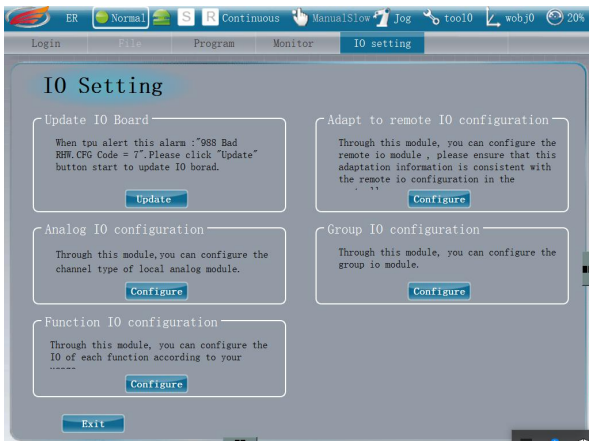	

3. Click on Yes to confirm the update and restart the controller.	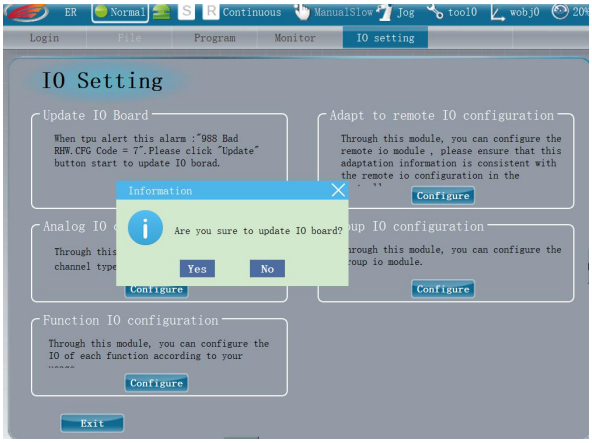	The teach pendent cannot be used before the controller is fully rebooted.

3.5.2 Remote IO Configuration

Table 3-7 Remote IO Configuration Procedures

Procedures	Demonstration	Remarks
1. Enter the Remote IO Configuration page.	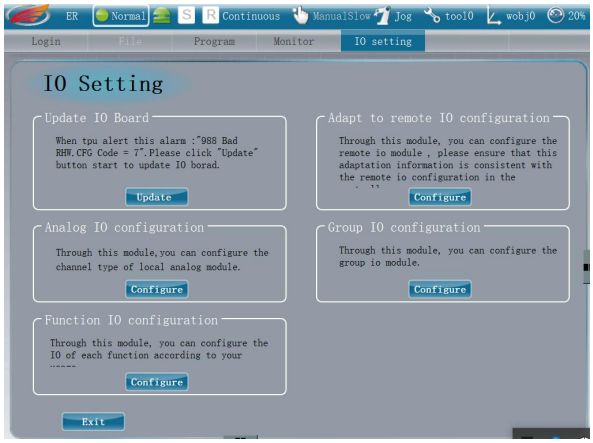	Click on “IO setting” on the teach pendant and choose “Adapt to remote IO configuration”.
2. Configure the remote IO module.	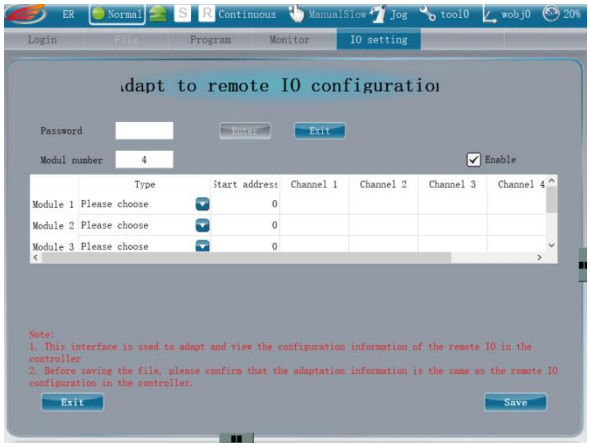	Type in “1975” in the password input box and click on Enter. Set the module number and Configure each module. Select a type from DI, DO, AI and AO for each module. Set the module address. Note that the length of each module address varies and the addresses already occupied by other modules cannot be reconfigured.

	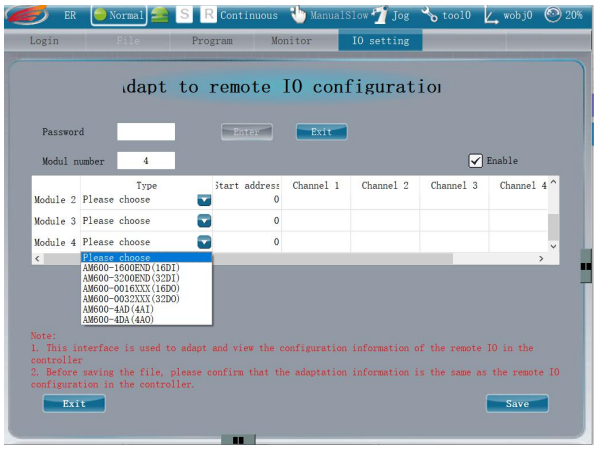	The channel types as demonstrated need to be further defined if the selected module type is AM600-4AD or AM600-4DA. Click to save the configuration to file.

Instructions for Remote IO Configuration :

Module Number: Each module within the set number needs to be configured otherwise the configuration information cannot be successfully saved to file.

Type: There are six module types, namely DI (16-bit), DI (32-bit), DO(16-bit), DO(32-bit) and AI and AO respectively.

Address: The address ranges from 300-500. The length for each address varies with modules and the addresses already occupied by other modules cannot be reconfigured.

AM600-0016XXX: 16-bit digital signal output occupying1 I16 register space.

AM600-0032XXX: 32-bit digital signal output occupying 2 I16 register spaces.

AM600-0016END: 16-bit digital signal input occupying 1 I16 register space

AM600-0032END：32-bit digital signal input occupying 2 I16 register spaces.

AM600-4AD: analog signal input occupying 4 I16 register spaces.

AM600-4DA: analog signal output occupying 4 I16 register spaces.

Channel: If the selected module is of AD or DA type, the channel type needs to be further defined. There are 7 channel types of AD modules and 6 of DA modules.

Enable: Tick on “Enable” and load the remote IO configuration changes.

3.5.3 Function IO Configuration

Function IO configuration includes IO input and IO output. Users can define the IO type, IO address and the valid value and the filter time in the configuration page.

Table 3-8 Function IO Configuration Procedures

Procedures	Demonstration	Remarks

1. Enter IO setting.	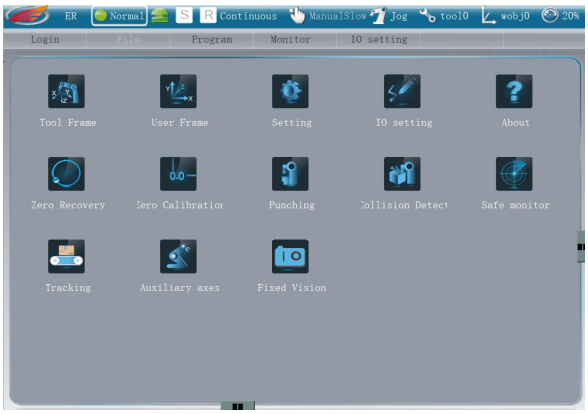	Click on “IO Setting” on the teach pendant.
2.Select “Function IO Configuration” as shown in demo.	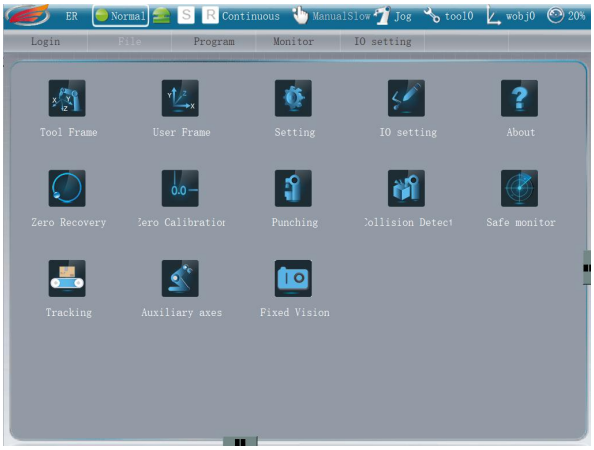	Click on “Configure” to enter the setting page.
3． Enter the IO setting page.	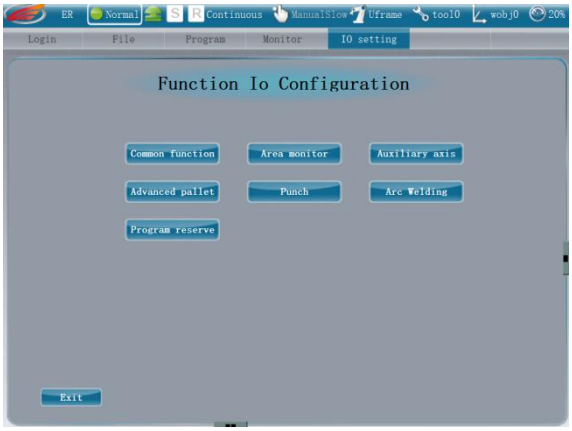	The configuration page includes 7 options, namely Common function, Area monitor, Auxiliary axis, Advanced pallet, Punch, Arc welding and Program reserve respectively. Users can choose on one of the seven options and enter the corresponding configuration page.
4. Enter Common Function configuration page.	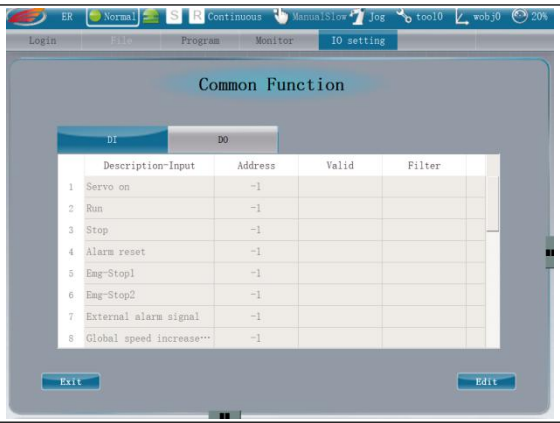	Choose the first option and check the previous configuration details in this page.

	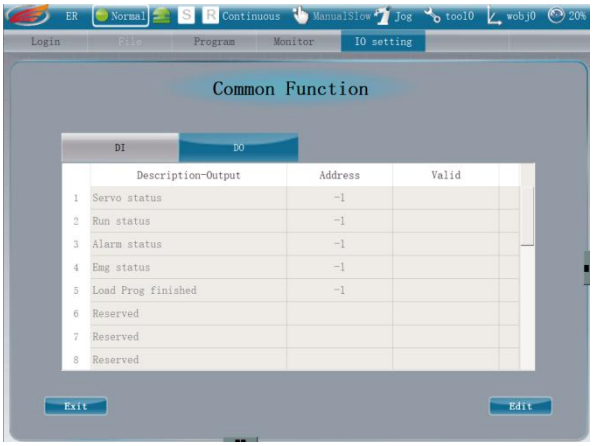	
5. Configure the common functions.	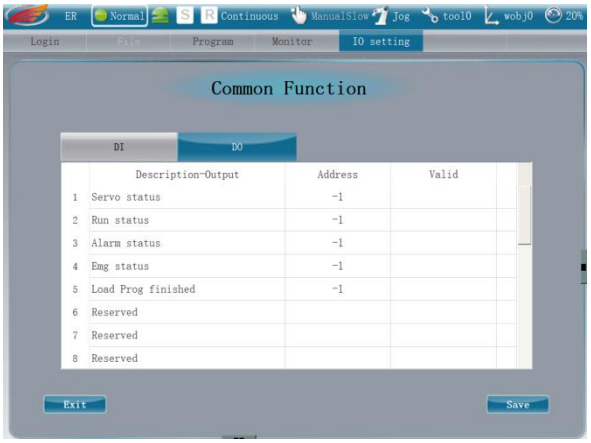 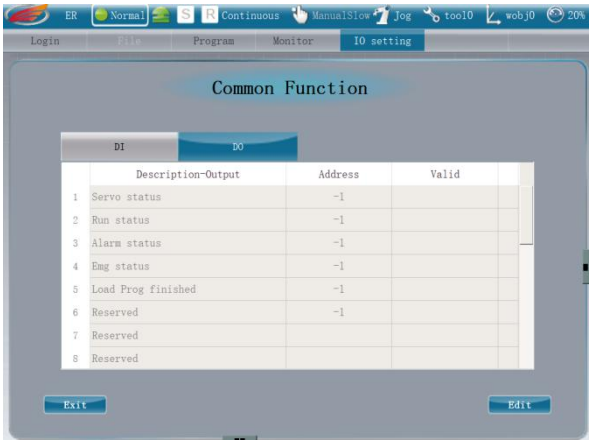	Click on Edit to enable the edition. The IO status cannot be refreshed while IO is being edited. Click to save the configuration to file. Click on Exit to return to the setting page.

Instructions for Function IO Configuration

Input Interface

1、Input Description：

Common Function

No.	Description	Remarks	Signal Type	Operation Mode
1	Servo-on	Control the servo switch	Pulse	Effective in Auto mode

2	Run	Run from the present line	Pulse	Effective in Auto mode
3	Stop	Stop the current program	Pulse	Effective in Auto mode
4	Alarm reset	Clear the present alarm message	Pulse	Effective in Manual/ Auto mode
5	E-stop 1/2	Emergency stop control	High and low level	Effective in Manual/ Auto mode
6	External alarm signal	Send an alarm signal to an external equipment	High and low level	Effective in Manual/ Auto mode
7	Global speed +/-(5)	Increase or decrease the robot global speed (5)	Pulse	Effective in Manual/ Auto mode
8	Restart	Return to the 1st line of the current program	Pulse	Effective in Auto mode
9	Loader	Load the programs by the sequence number. The sequence number of programs 1 to 4 is calculated by the signal status which is signified by binary numbers.	Pulse	Effective in Auto mode
10	Programs 1to 4	The status signals of programs 1-4 are converted into 4 binary numbers. Program 4 stays at the top of the sequence while program 1, at the bottom. For example, if the binary number for program 1 is 0101 then the corresponding decimal number is 5. Therefore program 4 is renamed 5 and the system load program 1 by the sequence number 5.	High and low level	Effective in Auto mode
11	Remote servo confirmation	The remote servo confirmation signal is	pulse	Effective in Auto mode

		equivalent to pressing the servo on button manually.		

Safety Monitor

No.	Description	Remarks	Signal Type	Operation Mode
1	Area monitor enabling	Area monitor enabling switch	High and low level	Effective in Manual/ Auto mode
2	A1 monitor enabling A2 monitor enabling A3 monitor enabling A4 monitor enabling	Monitor enabling switch for areas 1-4.	High and low level	Effective in Manual/ Auto mode
3	A1 control enabling A2 control enabling A3 control enabling A4 control enabling	Control enabling switch for areas 1-4.	High and low level	Effective in Manual/ Auto mode
4	A1 occupied input A2 occupied input A3 occupied input A4 occupied input	Area-occupied input signals for areas 1-4. The robot stops immediately upon receiving an area- occupied input signal from a non-shared area and waits until the occupation signal is cleared off.	High and low level	Effective in Manual/ Auto mode

Additional Axes

No.	Description	Remarks	Signal Type	Operation Mode
1	Positive movement for additional axes 1-4	These signals are sent to the robot specifying the positive movement of a single additional axis. For example, the 1st additional axis executes a positive movement if that signal is sent to the robot.	High and low level	Effective in Manual mode
2	Negative	These signals are sent to the	High and	Effective in

	movement for additional axes 1-4	robot specifying the negative movement of a single additional axis. For example, the 1st additional axis executes a negative movement if that signal is sent to the robot.	low level	Manual mode

Punching

No.	Description	Remarks	Signal Type	Operation Mode
1	Work piece in tool 1 detected	Detect if there is a work piece in tool 1.	High and low level	Effective in Auto mode
2	Work piece in tool 2 detected	Detect if there is a work piece in tool 1.	High and low level	Effective in Auto mode
3	Fetching allowed	Allow the robot to fetch a work piece.	High and low level	Effective in Auto mode
4	Discharging allowed	Allow the robot to discharge a work piece	High and low level	Effective in Auto mode
5	Upper end of a previous press	The upper end of a previous press.	High and low level	Effective in Auto/Manual mode
6	Upper end of current robot	The upper end of the current robot.	High and low level	Effective in Auto/Manual mode
7	Press emergency stop	E-stop signal for the press.	High and low level	Effective in Auto mode
8	Double sheets detection	Detect if there exists more than one piece of work.	High and low level	Effective in Auto mode
9	Single punching mode	Detect if the current punching mode is single or not.	High and low level	Effective in Auto mode
10	Waiting for palletizing	Waiting for the execution of palletizing.	High and low level	Effective in Auto mode
11	Waiting for depalletizing	Waiting for the execution of depalletizing.	High and low level	Effective in Auto mode
12	Work piece on the conveyor belt detected	Detect if there is a work piece on the conveyor belt.	High and low level	Effective in Auto mode
13	Work piece on pallet 1 detected	Detect if there is a work piece on the designated pallet.	High and low level	Effective in Auto mode
14	Work piece on pallet 2 detected	Detect if there is a work piece on the designated pallet.	High and low level	Effective in Auto mode

15	Work piece on pallet 3 detected	Detect if there is a work piece on the designated pallet.	High and low level	Effective in Auto mode
16	A new work piece located	Detect the signal of robot locating a work piece	High and low level	Effective in Auto mode
17	Signal 1 for confirming to locate a new work piece	Confirm the signal for starting to locate a work piece.	High and low level	Effective in Auto mode
18	Signal 2 for confirming to locate a new work piece	Confirm the signal for starting to locate a work piece.	High and low level	Effective in Auto mode
19	Signal 3 for confirming to locate a new work piece	Confirm the signal for starting to locate a work piece.	High and low level	Effective in Auto mode
20	Work piece in the fixture of the conveyor belt detected	Confirm that there is a work piece in the fixture of the conveyor belt.	High and low level	Effective in Auto mode

Advanced Palletizing

No.	Description	Remarks	Signal Type	Operation Mode
1	Arriving work piece for stack 1/2/3/4	This signal states there is an arriving work piece on the corresponding conveyor belt for stack 1/2/3/4.	High and low level	Effective in Auto/Manual mode
2	Ready to place the arriving work piece	Stack 1/2/3/4 is ready to place the arriving work piece	High and low level	Effective in Auto/Manual mode
3	Feedback on the gripper release in a stack.	Sending a signal to the robot indicating that the gripper in the corresponding stack is released.	High and low level	Effective in Auto/Manual mode
4	Feedback on the gripper closure in a stack.	Sending a signal to the robot indicating that the gripper in the corresponding stack is closed.	High and low level	Effective in Auto/Manual mode

2. IO module address: The actual IO port number of the signal needs to be configured. If it is not configured, it will display - 1. The IO occupied by the system cannot be re configured. The remote module address value follows the local actual maximum address value. For example, if there are 16 local input ports, the first port address of the remote module is 17.

3. Valid value: 0 stands for the trailing edge of a pulse signal or a low level signal. 1 stands for the rising edge of a pulse signal or a high level signal.

4 Filter time: Set a nonnegative minimal number for the filter time which is measured in seconds in order to reduce the signal interference.

Output Interface：

1、Output Description：

Common Functions

No.	Description	Remarks	Signal Type	Operation Mode
1	Servo status	Detect the current servo status	high and low level	Effective in Manual/ Auto mode
2	Run status	Detect running status of the current program	high and low level	Effective in Auto mode
4	Alarm status	Detect the alarms	high and low level	Effective in Manual/ Auto mode
5	Emg status	The emergency stop is in process.	high and low level	Effective in Manual/ Auto mode
6	Program loaded	Send the signal to the robot that a program is successfully loaded and the signal is reset once the robot starts to run the program.	high and low level	Effective in Manual/ Auto mode

Safety Monitor

No.	Description	Remarks	Signal Type	Operation Mode
1	A1occupied output A2 occupied output A3 occupied output A4 occupied output	Detect the occupation signals in areas 1 to 4. An area occupied output signal is sent to the robot if it enters the shared area. The output signal is released once the robot steps out.	high and low level	Effective in Manual and Auto mode

2	Safety position 1 Safety position 2 Safety position 3 Safety position 4	Detect the output signals defined in safety monitoring. Send the output signal to the robot once it enters the defined position.	high and low level	Effective in Manual and Auto mode

Punching

No.	Description	Remarks	Signal Type	Operation Mode
1	Tool 1 enabled/disabled	Enable or disable tool 1.	high and low level	Effective in Auto mode
2	Tool 2 enabled/disabled	Enable or disable tool 2.	high and low level	Effective in Auto mode
3	Fetching allowed	Allow the robot to fetch a work piece.	high and low level	Effective in Auto mode
4	Discharging allowed	Allow the previous robot to discharge a work piece.	high and low level	Effective in Auto mode
5	Punching	Punching a work piece.	high and low level	Effective in Auto mode
6	Press E-stop	Robot E-stop.	high and low level	Effective in Manual and Auto mode
7	Air pressure released in vacuum sucker 1	Vacuum sucker pressure is released.	high and low level	Effective in Auto mode
8	Air pressure released in vacuum sucker 2	Vacuum sucker pressure is released.	high and low level	Effective in Auto mode
9	Palletizing completed	Signal indicating the palletizing is completed.	high and low level	Effective in Auto mode
10	Depalletizing completed	Signal indicating that depalletizing is completed.	high and low level	Effective in Auto mode
11	Tool fixture enabled/disabled	Enable or disable a tool fixture.	high and low level	Effective in Auto mode
12	Conveyor belt fixture enabled/disabled	Enable or disable the conveyor belt fixture.	high and low level	Effective in Auto mode
13	Conveyor belt enabled/disabled	Enable or disable the conveyor belt.	high and low level	Effective in Auto mode

Advanced Palletizing

No.	Description	Remarks	Signal Type	Operation Mode
1	Stack 1/2/3/4 is full	Signal indicating that stack 1/2/3/4 is full.	high and low level	Effective in Manual and Auto mode
2	Gripper release in stack 1/2/3/4.	Signal to release the gripper and place a work piece.	high and low level	Effective in Manual and Auto mode
3	Gripper closure in stack 1/2/3/4	Signal to close the gripper and pick up a work piece.	high and low level	Effective in Manual and Auto mode

2. IO module address: The actual IO port number of the signal needs to be configured. If it is not configured, it will display - 1. The IO occupied by the system cannot be configured. The remote module address value follows the local actual maximum address value. For example, if there are 16 local input ports, the first port address of the remote module is 17.

3. Valid value: 0 stands for the trailing edge of a pulse signal or a low level signal. 1 stands for the rising edge of a pulse signal or a high level signal.

3.5.4 Analog IO Configuration

Table 3-9 Analog IO Configuration

Procedures	Demonstration	Remarks
1. Enter IO setting page.	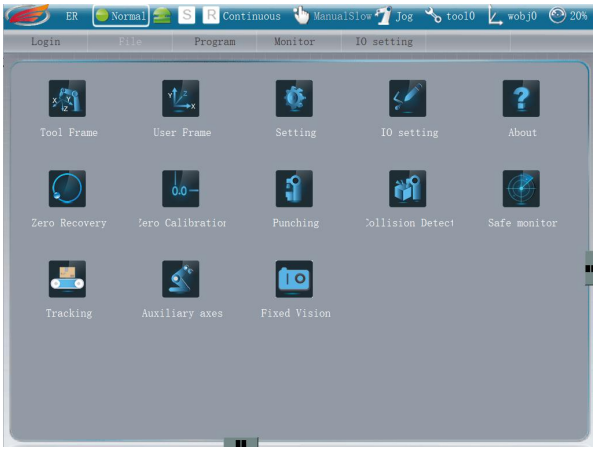	Click on IO setting on the teach pendant.

2.Select “Analog IO Configuration”.	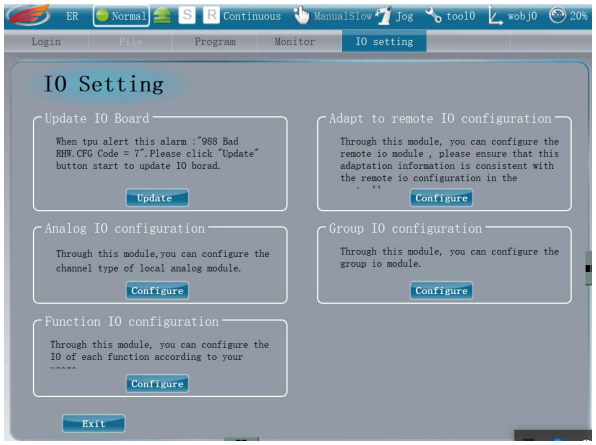 	Select Analog IO configuration and click ConFig.. A window message pops up stating that there is no IO module if the analog IO configuration hardware does not exit. Otherwise, users can enter the configuration page which displays the IO module type and the previously conFig.d channel type.
3.Configure the channel parameters for analog IO.	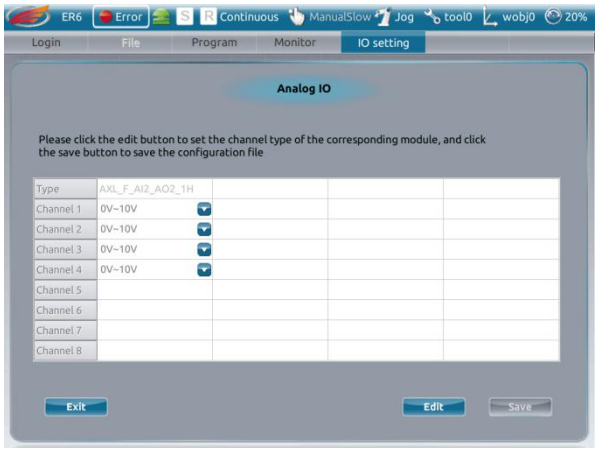	Users can check the previous configuration details. Click on Edit to enable the parameter edition. Click to save or discard the channel parameter configuration. Click on Exit to return to the setting page.

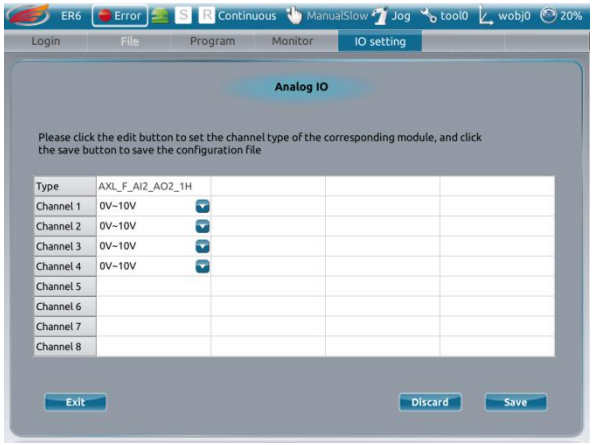

3.6 Introduction to Emergency Stop

Emergency stop switches are installed on the teach pendant, the control cabinet or a user-designated place. The function of an E-stop switch is to terminate the robot operation immediately by cutting off the driver output. Turn the switch clockwise to release the E-stop status.

The emergency stop is designed to eliminate the operation risk of any kind through cutting off the power supply. It takes precedence over any other robot operations and will remain effective until it is reset manually. The following effects can be achieved through system configuration.

•E-stop type 0: Stop the current operation immediately through cutting off the motor power.

•E-stop type 1: Stop the current operation without cutting off the motor power so that the robot can maintain its current path.

E-stop type 0 is the default setting of the system. However, it is strongly recommended that users should choose E-stop type 1 in order to avoid unnecessary machine wearing and the extra operations required for system recovery.

Attention	**Emergency stop can only be used for its designed function.**
Attention	**Emergency stop functions to terminate a robot operation immediately in case of emergency.**
Attention	**Emergency stop should not be used to terminate a normal routine otherwise it might lead to extra machine wearing.**

3.6.1 Emergency Stop

Pull out the short-circuit strip from the terminal block and connect the emergency stop switch into the series circuit as shown in Fig. 3-2. The recommended wire cross-section should be larger than 0.5 mm².

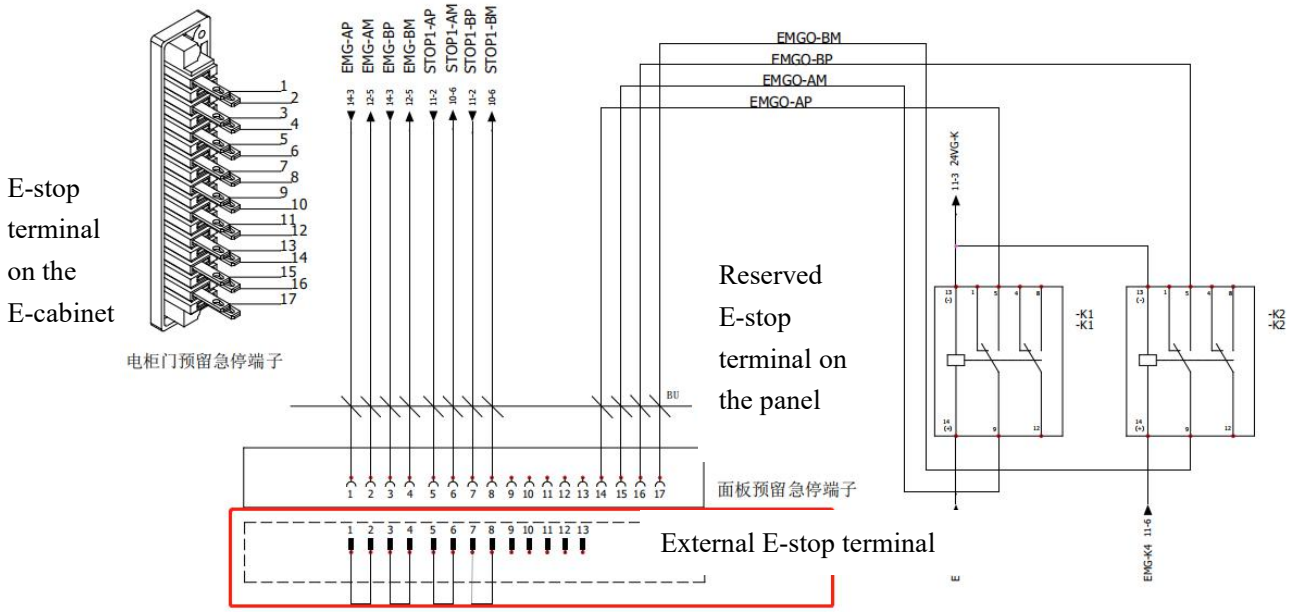

Fig. 3-2 Wiring of Emergency Stop Switch

Table 3-9 External E-stop Terminal Description

Terminal Sequence	Remarks
1	EMG-AP
2	EMG-AM
3	EMG-BP
4	EMG-BM
5	STOP1-AP
6	STOP1-AM
7	STOP1-BP
8	STOP1-BM

Note: Both terminals 1 and 2 and terminals 3 and 4 are two circuit pairs for external E-stop. Both terminals 5 and 6 and terminals 7 and 8 are two circuit pairs for the safety door.

The external device needs to detect whether the emergency stop signal of the robot is triggered or not. Users can pull out the short-circuit strip from the terminal block and insert the external E-stop cables into the corresponding terminal with a tube pre-insulating terminal end of E0508 type.

Chapter Four Quick Start

4.1 Teach Pendant

4.1.1 About the teach pendant

The teach pendant is an interactive equipment between the operator and the robot. An operator can complete all the designed functions of a robot through the teach pendant, such as manual jogging, programed jogging and IO configuration etc.



Fig. 4-1 Teach Pendant

Table 4-1 Parameters of Teach Pendant

No.	Item	Parameters
1	Display size	TFT 8-inch LCD
2	Display resolution	1024*768
3	Touch screen	Yes
4	Function keys	E-stop、Mode Switch（Manual-S、Manual-F、Auto）,28 keys
5	Mode switch	Manual-S/Manual-F/Auto
6	USB	1 USB 2.0 Interface
7	Power	DV24V
8	Dust/Water proof rate	IP65
9	Working conditions	Environment Temperature: -20°C~70°C

4.1.2 Function Keys and Interfaces



Fig. 4-2 Teach Pendant

Table 4-2 Teach Pendant Function Description

No.	Item	Remarks
1	Membrane panel 3	EFFORT LOGO
2、3	LCD Display	Used for interactive operations
4	Membrane panel 2	Equipped with 10 keys
5	E-stop	Double circuit E-stop switch
6	Mode Switch	Three-section mode switch
7	Membrane pannel1	Equipped with18 keys and 1three-colored LEDs
8	USB	2.0USB for file transfer
9	Three-stage Enabling Key	Press to turn on servo in Manual-S mode

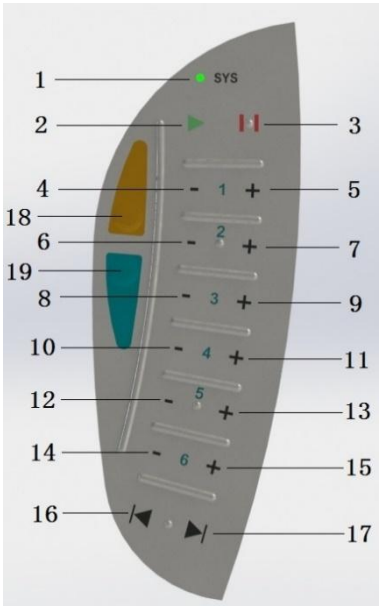

Fig. 4-3 Right Side Keys

Table 4-3 Right Side Keys Description

No.	Item	No.	Item
1	Three-colored LED	11	J4 Movement -
2	Start	12	J5 Movement +
3	Pause	13	J5 Movement -
4	J1 Movement +	14	J6 Movement +
5	J1 Movement -	15	J6 Movement -
6	J2 Movement +	16	Step BWD
7	J2 Movement -	17	Step FWD
8	J3 Movement +	18	**User-defined key 1:Slow speed switch**
9	J3 Movement -	19	**User-defined key 2:Step length switch**
10	J4 Movement +		

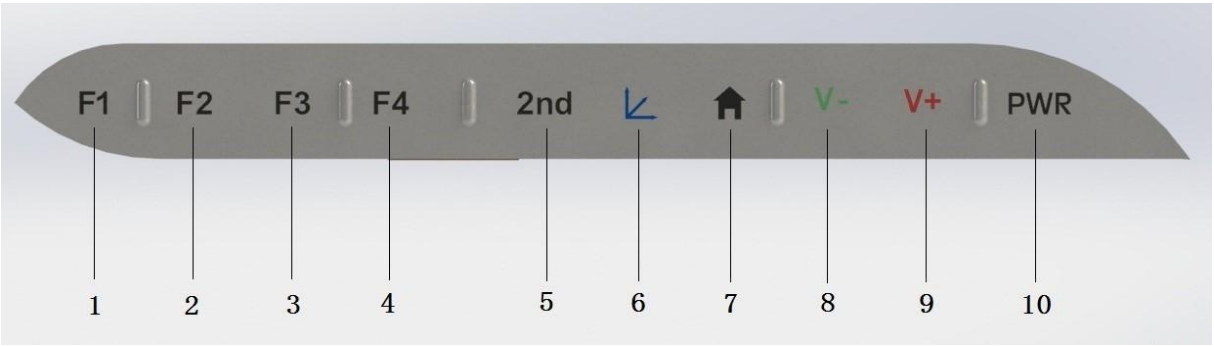

Fig. 4-4 Bottom Keys

Table 4-4 Bottom Keys Description

No.	Item	No.	Item
1	F1:Multifunctional Key Check the alarm message	6	Coordinate System Switch
2	F2:Multifunctional Key Screenshot by a double click	7	HOME
3	F3:Multifunctional Key Program mode（Continuous, Step IN or Step Over）	8	Speed-
4	F4 :Multifunctional key	9	Speed+
5	Flip	10	Servo-on

4.1.3 How to Hold a Teach Pendant?

Hold the teach pendant with the left hand and press the enabling key to turn on the servo when the robot is jogging as shown in Fig. 4-5.



Fig. 4-5 Hold the Teach Pendant with the Left Hand

4.2 Power On

Turn the power switch clockwise to start the robot system. Users can operate the robot with the authorized user type from the logging page. Please check and handle the alarm messages according the Alarm Instruction
Manual.

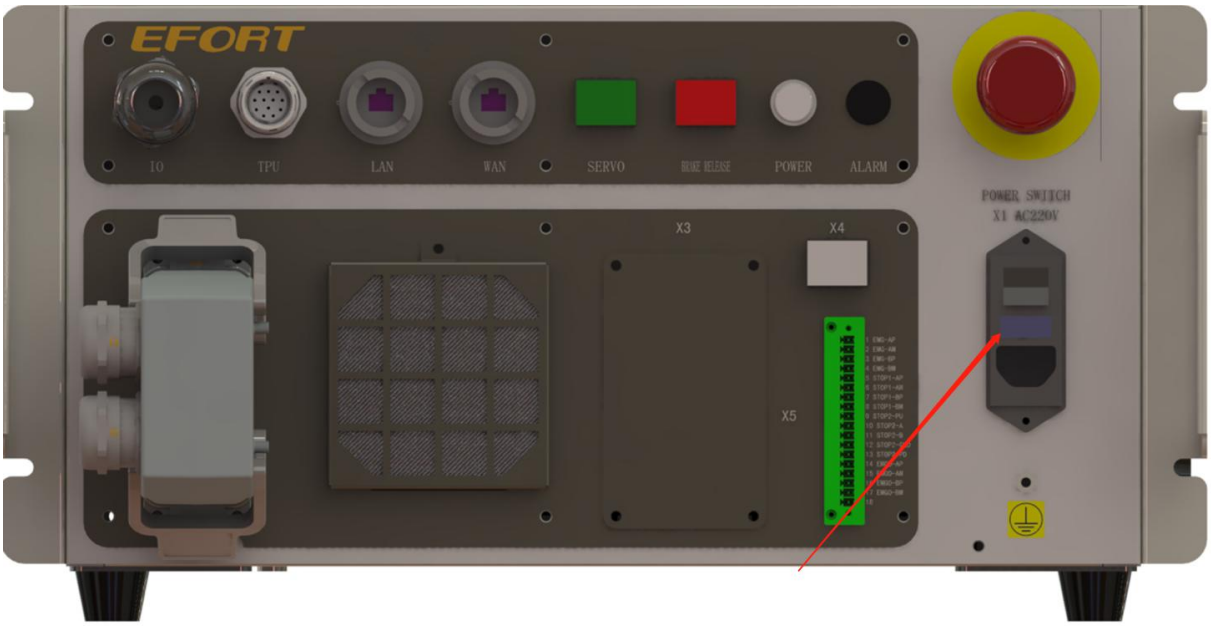

Fig. 4-6 Main Power Switch

Table 4-5 External Equipment Specifications

Name	Specifications
External electric leakage protector	30mA
External circuit break	>10A

4.3 Jogging

4.3.1 What is Jogging?

Jogging is performed under the Manual-S mode through the function keys “-” or “+” on the right side of the teach pendant. When the servo is on, an operator needs to select the coordinate reference system and the speed ration before jogging the robot. Jogging can be further classified into two types, continuous jogging and incremental jogging.

（1）Continuous jogging refers to moving the robot by holding down the function keys “-” or “+”.

（2）Incremental jogging refers to moving the robot with a predefined incremental step length by pressing the function keys “-” or “+”.

4.3.2 Precautions for Jogging

Please read the ER Series Robot Safety Manual carefully before jogging the robot.

- An operator should stand in the area beyond the robot's maximum movement reach.
- An operator should monitor the robot from the front to ensure there is a safety exit in case of emergency.
- Ensure there is nobody within the robot movement reach.
- Check and clear off the alarm message before any further operation.
- Check whether the mechanical home positon matches that of each axis in the teach pendant.
- Check the jogging global velocity and the chosen coordinate system before turning on the servo.

4.3.3 Start Jogging

Choose the user type of "Administrator" and log on to the system. Select "Position" from the drop-down list under Monitor and enter the jogging configuration.

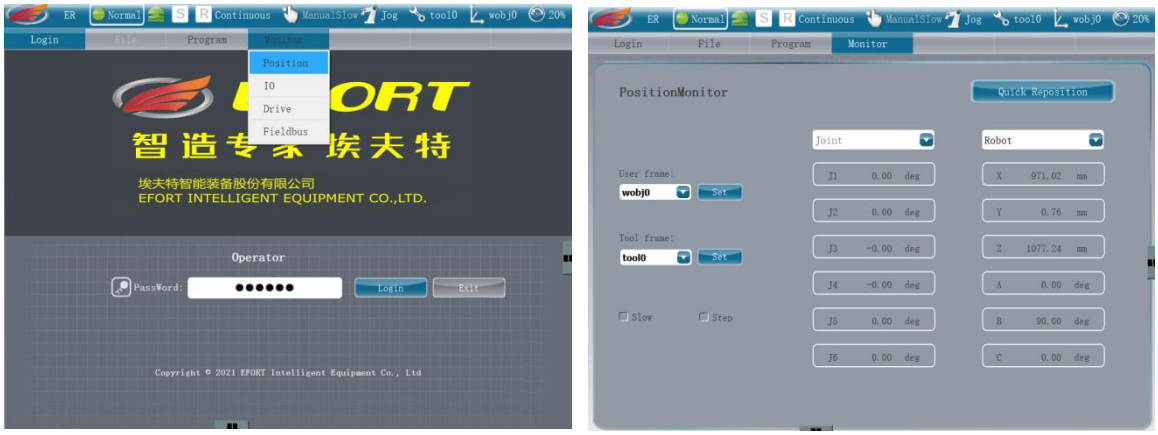

Fig. 4-7 Joint Position Display

Click on  to switch the coordinate systems on the teach pendant. The coordinate system switches from joint coordinate system to Cartesian coordinate system, tool coordinate system and user coordinate system. The selected coordinate system is shown on the status bar on the teach pendant.



Fig. 4-8 Coordinate System Switch

4.3.4 Joint Coordinate System-Jogging

Select joint coordinate system and hold the enabling key. Press the function keys "-"、"+" on the control panel of teach pendant to adjust the motion angles of the corresponding axis as shown in Fig. 4-9.



Fig. 4-9 The Enabling Key and the Right Side Function Keys

Please refer to ER Series Robot Operation Manual for detailed programing instructions of ER3-600 industrial robot.

4.4 Power Off

The procedures for turning off the main power are as follows:

1. Press "Stop" on the teach pendant to stop the robot if the current program is completed.
2. Turn the switch mode to T0.
3. Press the enabling key.
4. Jog the robot to the home position in the manual slow speed mode.
5. Release the enabling key.
6. Turn the power switch to OFF on the control cabinet as shown in Fig. 4-10. Please wait at least 5 seconds before rebooting.

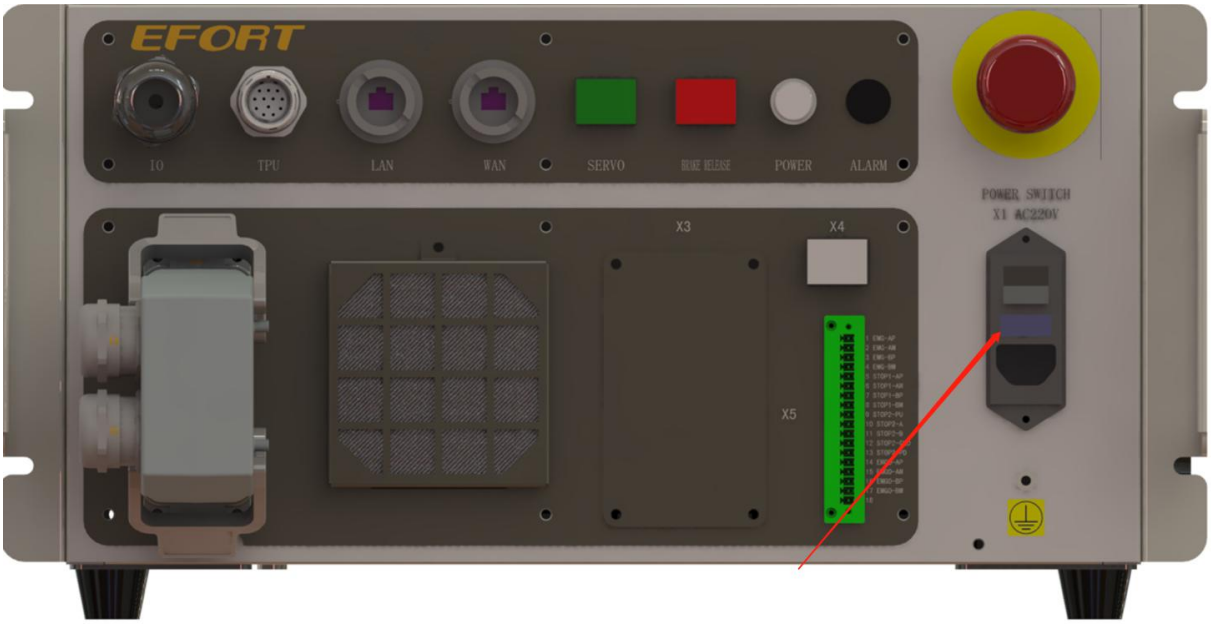

Fig. 4-10 Main Power Switch

Chapter Five Common Faults and Recommended Solutions

Fault description	Verification procedures	Remarks
The control cabinet cannot be booted.	1. Check if the power supply is working or not. 2. Check if the power circular connector is correctly wired. 3. Check if the disconnector switch is closed. 4. Check if the core of FU1 is working or not. Replace it with a new one if it is damaged. 5. Check if the filter fuse is working or not. Replace it with a new one if it is damaged. 6. Please contact the service professionals if the fault still exists. Note: Take the filter fuse cover out when checking the filter fuse status. There is a 10 A glass fuse and a 6 A glass fuse in the accessory box.	Replace the core or glass fuse with those of the same parameters.
E-stop alarm occurs after the control cabinet boots.	1. Check and reset the E-stop button on the control cabinet. 2. Check whether the teach pendant is successfully connected and if its E-stop button has been reset. 3. Check whether the E-stop button on the user-defined control panel has been reset. 4. Please contact the service professionals if the fault still exists.	The E-stop button is on in default. Reset the E-stop button before use.
The teach pendant cannot be booted.	1. Check whether the connecting cables of teach pendant are correctly wired and locked. 2. Check if the glass fuse of FU1 is working or not. Replace it with a new one if it is damaged. 3. Check whether the files in the motion control card are damaged. Contact the service professionals when in need. 4. Please contact the service professionals if the fault still exists.	Replace the core or glass fuse with those of the same parameters.
The servo cannot be turned on through the teach pendant.	1. Check if all the alarms are properly handled. 2. Check if the enabling key is correctly pressed on and if the controller can receive “Enable” signal in Manual-S mode. 3. Check the servo button on the control cabinet is working or not in the Manual-F mode or Auto mode. 4. Please contact the service professionals if the fault still exists.	Press the servo button on the control cabinet to run the robot in Manual-F or Auto mode.

The robot cannot be booted.	1. Check if there are alarm messages on the teach pendant. Handle the alarms according to the instructions. 2. Please contact the service professionals if the fault still exists.	
The hot swap function of teach pendant is disabled.	1. Check if the “Hot plug” button is working or not. 2. Check if the relevant cables are intact or not. 3. Check if the short-circuit plug of teach pendant is properly connected and locked. Please contact the service professionals if the fault still exists.	It is strongly recommended that an operator should strictly follow the Electrical Operation and Maintenance Manual when handling with hot swap.
The brake component cannot be released.	1. Check if the supply power 24VP-BR/24VG-BR is working or not. 2. Please contact the service professionals if the fault still exists.	

Service hotline: +86-400-0528877

The rated power, specifications and external dimensions of this product are subject to change without prior notice. The technical data and illustrations are for reference only, and we reserve the right to change them.

EFORT INTELLIGENT EQUIPMENT CO.,LTD

No 96,Wanchun Road,Jiujiang Economic Development Zone,
Wuhu, Anhui,China
Websit:**http://www.efort.com.cn**